Faik Group

A Touch of Professionalism

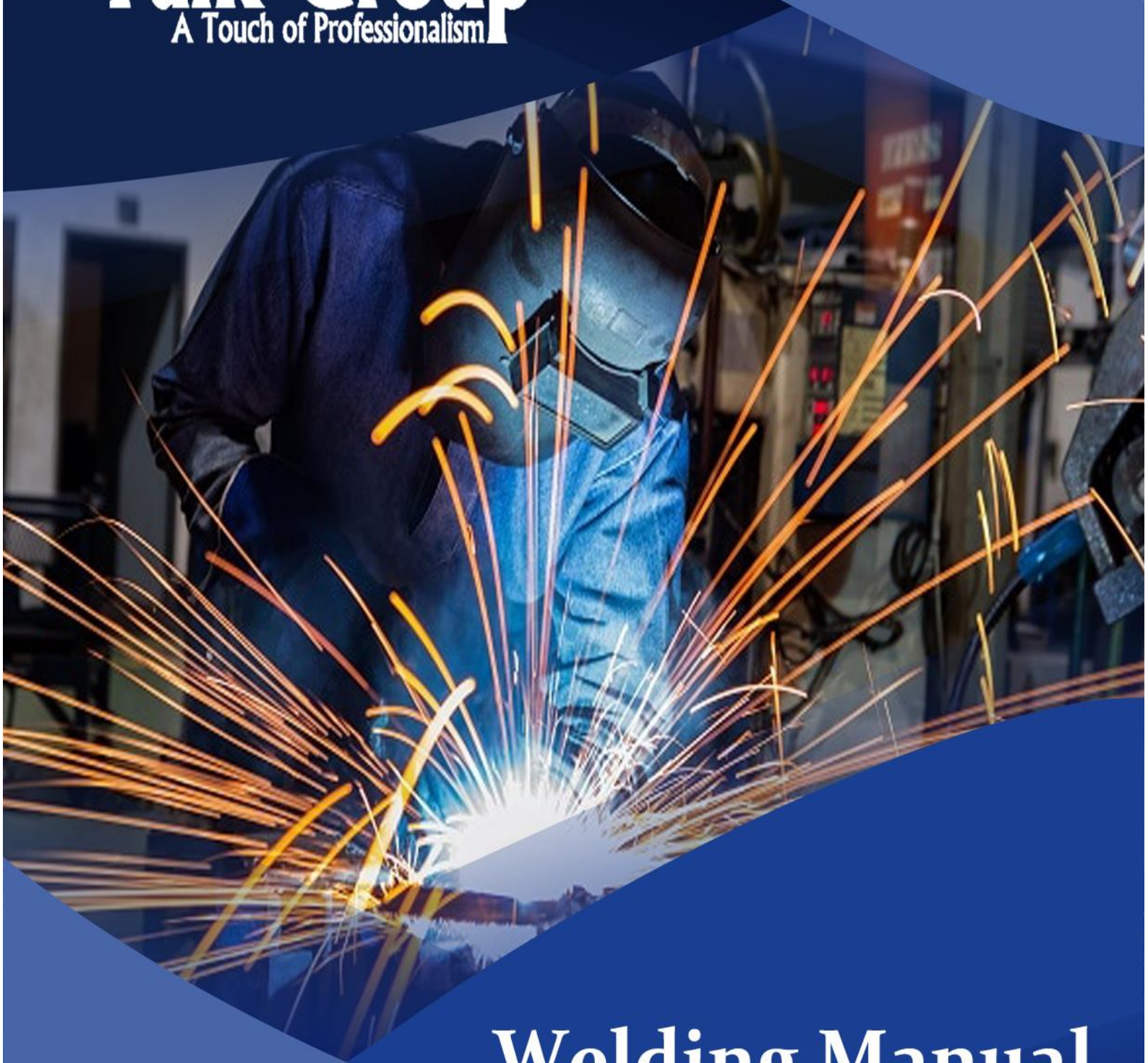

Welding Manual

SOCOTEC ISO 9001 · CERTIFIED ISO 9001:2015 COMPANY · UKAS MANAGEMENT SYSTEMS

1. Contents

1. Contents 1
2. Introduction 2
3. Specifications & Codes 3
4. Welding Qualification Documentations 3
5. Procedures of Welding 4
6. Tack Welding 4
7. Field Site Welding 4
8. Welding Consumables: 5
9. Production Test Plates: 5
10. Welding Records: 5
11. NDR – Non Destructive Testing & Reporting 5
12. Procedures: 5
13. NDR Qualified Testing: 6
14. NDR Testing Requirements: 6
15. NDR Testing Reporting: 6
16. NDR Testing 7
a. Welding Visual Inspection 7
b. Radio Graphic Testing – RT 8
c. Ultrasonic Testing – UT 10
d. Liquid Penetrant Testing – PT 11
e. Magnetic Particle Testing – MT 12
17. Calibration 13
a. Calibration Procedures: 13
b. Calibration Records: 14
18. Welding Procedure Qualification Report – WPQR 14
19. Welders Qualification Performance – WQP 14
20. Attachments: 15

+20 2 27950487
faik@faik.com
www.faik.com
7 Magless El Shaab St, Down Town, Cairo Egypt.

2. Introduction

FAIK Group has been a family business started on 1970 by our late beloved Ahmed Faik, passing on our great experience and knowledge from one generation to another, empowered by science and technology to meet up with customers' requirements. Experience: We have started in manufacturing various products ranging starting Automotive Spare Parts passing by Feeding Industry until Construction Industry.

Faik group presented in two companies:

- Faik Manufacturing Company: founded under the Egyptian law in 1994 as a private free zone with the main aim of exporting and trading through the private free zone. With capital of 5 Million US Dollars.
- AL Faik Company S.A.E.: founded in 1989 under the name of Faik for engineering & trading as Limited company, and was transferred to AL Faik for Engineering & Trading S.A.E. with capital of 10 Million EGP. With main aim of trading worldwide.

"FAIK" has successfully achieved its consumers' trust, and accomplished a long list of products, components, spare parts, which are feeding the industries in Egypt and abroad, covering all major fields of industry, covering a wide range of industries.

We ensure Total Quality through our Quality Assurance Section reporting directly to the Company General Manager. To provide the highest desirable standards those who are maintained throughout FAIK assignments during the various phases of the production.

In the performance of our work, we use the most advanced tools, techniques, and machinery. The plant is extensively equipped with progressive and modern machines that ensure that FAIK will remain in the highest competitive level.
Our products are specifically designed to guarantee high standards and high quality.

Last But Not Least …
Faik is not just a name of a company, it is the definition of trust, a business companion that you can rely on, not just by words, but our history proves that and our actions speak for us.

We remain...
Eng. Mostafa Faik
Founder

+20 2 27950487
faik@faik.com
www.faik.com
7 Magless El Shaab St, Down Town, Cairo Egypt.

3. Specifications & Codes

الكود المصرى

4. Welding Qualification Documentations

1) WPS: Welding Procedure Specification.
2) PQR: Procedures Qualification Record.
3) Welding Inspection Certificates.
4) WPQ: Welder Performance Qualification.
5) FMC: Filler Metal Certificate.
6) Welding Material.
7) Liquid Test Procedure.
8) Visual Inspection Report.
9) Liquid Penetrant Test Report.
10) NDR Testing

+20 2 27950487
faik@faik.com
www.faik.com
7 Magless El Shaab St, Down Town, Cairo Egypt.

5. Procedures of Welding

- Each qualified welder or welding operator assigned an identification stamp with which to identify each weld made adjacent to the weld at least every 0.9 meter. In case a welder or welding operator leaves the employ of Company Legal Name, the assigned identification stamp shall not be re-issued for a period of at least six months.
- Should more than one welder be involved in performing a weld seam, both welders shall make the weld seam with their identification stamp. When conditions prevent stamping of welds, the welder or operator enters their identification on the part next to the relevant operation.
- The welding head team verify that all production welders and welding operators are qualified for the production essential variables to be used, based on the List of Qualified Welders and is responsible for instructing the welder in the correct use of the specified WPS.
- In the case of tube-to-tube sheet welds, it is the responsibility of the welding head team to maintain a record clearly indicating the area welded by each welder or welding operator.

6. Tack Welding

- Tack welds, shall be made in accordance with a qualified WPS, whether left in place or completely removed. Tack welds left in place shall be made only by qualified welders.
- When left in place, tack welds shall be made by qualified welders, and the ends of each tack weld ground to ensure complete fusion into the final weld, and the welder's identification recorded on the part or marked adjacent to the weld.
- After preparation, the welding head team visually examines each tack weld, and if cracked or otherwise defective, it is completely removed and replaced.

7. Field Site Welding

- Nonconformities found during field assembly are recorded on the part next to the operation where they occurred and are controlled as described in this Manual.
- All welding shall be done in accordance with this Manual, and in addition, the welding head team, together with the quality head team shall establish the action necessary to protect the welding activities from adverse weather conditions such as wind, rain, temperature and humidity.
- All concerned WPS´s and supporting PQR´s shall be sent to the welding head team, they shall then be distributed to the needed authority. WPS´s shall be made available to the welders for their use. All WPS´s and PQR´s shall be made available to the Authorized Inspector at the field site for review.
- Welders shall be qualified as described. The List of Qualified Welders shall be sent for use in assigning welders to their work. This list along with the welder's qualifications shall be made available to the Authorized Inspector for review.
- The welding head team is responsible for the issuance of welding consumables. The welding head team is responsible for transmitting the manufacturer's recommendations for handling and storage of the welding consumables to the field location.

8. Welding Consumables:

- Welding Consumables are ordered, received and stored as Faik Process Sheet.
- Prior to being used, the welding consumables (fluxes, covered electrodes) are stored in dry heated storage space in the storeroom.
- Low hydrogen coated electrodes are received in sealed containers. When opened, the electrodes are place in a heated oven maintained at the temperature recommended by their manufacturer.
- Welders will obtain weld material, which is specified on the WPS they are working to. For coated electrodes only a quantity sufficient to complete the weld or for a period of eight hours which ever is less will be issued.
- Unconsumed electrodes returned for storage are examined for condition, cleanliness and identification before return to a segregated oven for reconditioning if they have not been maintained in a portable oven. Damaged or unidentified electrodes are scraped.

9. Production Test Plates:

- Welded test plates for ASME Code required production vessel tests, impact, welds and heat-affected zones, are prepared in accordance with a procedure prepared by the TITLE OF RESPONSIBLE and shown on the welded part.
- The welding head team supervises the welding of test plates, which are prepared and tested by a testing laboratory whose test report is reviewed for acceptable results or the need for retest.
- Test results are submitted for review and acceptance to the Authorized Inspector, who may witness the tests if desired.

10. Welding Records:

- All records mentioned above are available for review by the Authorized Inspector.

11. NDR – Non Destructive Testing & Reporting

All NDR Testing required by the Code specified on the Part, and is performed by qualified and certified personnel, using written procedures and calibrated equipment.

12. Procedures:

- All Code NDE is performed using written procedures that are verified by the welding head team and approved by the Level III Examiner who is qualified in the method and appointed as our Level III in accordance by our Written Practice which meets the requirements of the latest Code accepted edition of SNT-TC-1A.
- All NDE procedures are reviewed and approved by the Level III with his signature and date.
- All NDE procedures are submitted to the Authorized Inspector for his review and acceptance.
- Written procedures for radiographic (RT), ultrasonic (UT), liquid penetrant (PT) and magnetic particle (MT) examination of ASME Code items are demonstrated to the satisfaction of the Authorized Inspector, certified and distributed according to a list maintained by the welding head team.

+20 2 27950487
faik@faik.com
www.faik.com
7 Magless El Shaab St, Down Town, Cairo Egypt.

13. NDR Qualified Testing:

- The Level III certifies, the personnel used for Code NDE as having the training, experience and qualifications for the method, in accordance with our Written Practice, which conforms to the requirements of the latest accepted edition of SNT-TC-1A, when examiners are performing PT on Section VIII Div.3 items or on steel castings according to Section I. For Section VIII Div.1, MT and PT examiners they may be certified in accordance with Appendix 6 and 8 respectively, or Appendix 9 for Section VIII Div.2. Section I Power Piping VT examiners are certified in accordance with our VT Written Practice, which meets the requirements of ASME B-31.1.
- NDE Personnel Records are available for review by the Authorized Inspector, who may request re-qualification if there is reason to question an examiners ability to perform the examination.
- Copies of NDE personnel qualification records for all examiners performing Code NDE are kept on file by the welding head team and made available to the Authorized Inspector.

14. NDR Testing Requirements:

Before performance of pneumatic tests as permitted by ASME Code Section VIII Division 1 & 2, the full length of the following welds are examined by MT or PT, whichever is applicable, for the purpose of detecting possible cracks as follows:

1- All welds around openings;
2- All attachment welds, including welds attaching non-pressure parts, having a throat thickness greater than 1/4" or 6mm.

For Section VIII Div.3, all surfaces of pressure boundary components including internal and external surfaces and weld metal shall be examined. Examination shall be carried out by wet magnetic particle method (if ferromagnetic) or by liquid penetrant method (if nonmagnetic) over the entire surface of the vessel or component following all applicable heat treatment and auto frettage hydro test, unless accessibility prevents meaningful interpretation and characterization of defects.

15. NDR Testing Reporting:

- Nonconformities found during field assembly are recorded on the part next to the operation where they occurred and are controlled as described in Section 7 of this Manual.
- Profiles of all NDE personnel maintained by the welding head team and be made available to the Authorized Inspector.
- All radiographs and test reports shall be available to the Authorized Inspector for review.
- Following the Authorized Inspectors acceptance, all radiographs and test reports are forwarded to the welding head team at the Home Office.

16. NDR Testing

- All NDR procedures are submitted to the Authorized Inspector for their review and acceptance. Written procedures for radiographic (RT), ultrasonic (UT), liquid penetrant (PT) and magnetic particle (MT) examination of ASME Code items are certified in accordance with T-150 of the ASME Code Section V, as demonstrated to the satisfaction of the Authorized Inspector.
- NDR Personnel Records are available for review by the Authorized Inspector, who may request re-qualification if there is reason to question an examiners ability to perform the examination.
- Copies of NDR personnel qualification records for all examiners performing Code NDR are available to the Authorized Inspector and the ASME Designee.
- All required NDR Reports by the subcontractor including RT film, are reviewed and accepted by the Level II or III prior to submittal to the Authorized Inspector for their review.
- NDR Reports, including film for full, partial and spot Code required RT, are filled by welding head team for record retention.

a. Welding Visual Inspection

Visual inspection is probably the most underrated, and often misused, method of welding inspection. Because of its simplicity, and the absence of sophisticated equipment, the potential of this method of inspection is quite often underestimated. Visual inspection of welding can often be the easiest to perform and is usually the least expensive to conduct. If carried out correctly, this type of inspection can often be an extremely effective method of maintaining acceptable welding quality and preventing welding problems. There are many areas within the welding operation that can be verified and evaluated by this method of inspection.

Pre-Weld Inspection

This inspection is conducted prior to the start of the welding operation. This type of inspection is typically associated with checking the preparation of the welding joint and verification of parameters that would be difficult or impossible to confirm during or after welding. This is the area of inspection where we can best introduce controls that may prevent defective welding. Some areas of pre-weld inspection are joint preparation inspection/pre-weld setup. This may involve the dimensional inspection of root openings. Root openings that are too tight can cause inadequate root penetration. Root openings that are too large can cause over- penetration. Groove weld bevel angles, if too small, may cause lack of fusion, and if too large, can result in distortion of the weld joint from overheating and excessive shrinkage stress. Joint alignment (misalignment of the weld joint) can result in difficulty in producing a sound weld and stress concentration at its location, resulting in a reduction of fatigue life. Plate surface condition and cleanliness, pre-cleaning prior to welding, can often be of extreme importance. Improper or inadequate cleaning can result in unacceptable levels of porosity in the completed weld. Other pre-weld inspections may include preheat

verification, temperature and heating method, presence and location of heat treatment monitoring devices, and type and efficacy of gas purging, if applicable.

Pre-weld inspection may also include evaluation and verification of documentation, material certification, filler alloy certification, welder performance qualification, welding procedure qualification, and welder and weld identification, for traceability, if applicable

Inspection During Welding

This is the inspection that is carried out during the welding operation and is concerned mainly with the requirements of the welding procedure specification (WPS). This inspection includes such items as interpass cleaning methods, interpass temperature control, welding current settings, welding travel speed, shielding gas type, gas flow rate, and welding sequence, if applicable. Also, any environmental conditions that may affect the quality of the weld such as, rain, wind, and extreme temperatures.

Post-Weld Inspection

This inspection typically conducted to verify the integrity of the completed weld. Many non-destructive testing (NDT) methods are used for post-weld inspection. However, even if the weld is to be subjected to NDT, it is normally wise to conduct visual inspection first. One reason for this is that surface discontinuities, which may be detected by visual inspection, can sometimes cause misinterpretation of NDT results or disguise other discontinuities within the body of the weld. The most common welding discontinuities found during visual inspection are conditions such as undersized welds, undercut, overlap, surface cracking, surface porosity, under fill, incomplete root penetration, excessive root penetration, burn through, and excessive reinforcement.

Conclusion

A good pre-weld inspection plan may provide us with an excellent opportunity to prevent welding problems before they start, through the detection and correction of situations that may cause welding problems or welding discontinuities.
Inspection conducted during the welding operation can often detect problems before they escalate and also helps to provide confidence in the final welded product.

b. Radio Graphic Testing – RT

Unlike destructive testing methods in which the completed weld is broken in order to evaluate its mechanical properties, radiographic testing leaves the finished product intact.

With this approach, X-rays are used in a similar fashion as in the medical field; in both industries, inspectors can use electromagnetic radiation to view the internal composition of a structure without taking it apart.

+20 2 27950487
faik@faik.com
www.faik.com
7 Magless El Shaab St, Down Town, Cairo Egypt.

How the process of radiographic testing works in welding:

Step 1: A radioactive isotope produces gamma rays or X-rays.
Step 2: The radiation is sent through the weldment onto photographic film.
Step 3: An image of the internal structure of the weldment is created on the film.
Step 4: Darker areas of the image reflect thinner portions of the weldment, suggesting discontinuities like cracking or porosity, a common welding mistake. Lighter areas of the film may suggest high density inclusions, such as tungsten.
Step 5: Radiographic interpreters trained to read the films and identify weld discontinuities by the shape and variations of dark and light examine the test results.

What Are the General Advantages and Disadvantages of Radiographic Testing?

There are many general benefits to radiographic testing, as well as some drawbacks.

Radiographic Testing Advantages

- Radiographic testing is a positive approach for finding porosity, cracks, inclusions and voids in the inside of weldments.
- Surface and subsurface defects can be uncovered.
- Dimensions and angles within the sample can be measured without sectioning.
- Subtle changes in corrosion, thickness, material density and flaws can be detected.

Radiographic Testing Disadvantages

- Must be conducted by a qualified radiographic interpreter.
- False interpretation can interfere with productivity and be costly.

What Are the Different Types of Radiographic Testing?

There are two main types of radiographic testing: conventional radiography and digital radiography. The digital approach has multiple variations. Each method has its pros and cons.

Conclusion:

Since welding is used in the manufacture and construction of so many products and structures found in society, it is crucial that safety measures are put in place to keep the public safe.
Destructive and nondestructive testing are two forms of quality assurance in welding. Radiography is a useful method of nondestructive testing that you may learn more about as you advance in your welding program. Additionally, the field of quality assurance presents advanced career paths in welding; two examples are welding interpreters and welding inspectors.

+20 2 27950487
faik@faik.com
www.faik.com
7 Magless El Shaab St, Down Town, Cairo Egypt.

c. Ultrasonic Testing – UT

Ultrasonic Testing is a volumetric Non-Destructive Testing (NDT) method. Unlike surface inspection methods, UT makes it possible to find flaws inside the material. High-frequency sound waves are sent into the material with an ultrasonic transducer.

The ultrasound that reflects off defects in the material is made visible in a graph. Ultrasonic Testing gives insight in the depth, size, nature and orientation of the detected indications. The thickness of the material, such as wall thickness of pipes, can also be measured.

What are the advantages of ultrasonic testing?

Ultrasonic testing is completely nondestructive. The test piece does not have to be cut, sectioned, or exposed to damaging chemicals. Access to only one side is required, unlike measurement with mechanical thickness tools like calipers and micrometers. There are no potential health hazards associated with ultrasonic testing, unlike radiography. When a test has been properly set up, results are highly repeatable and reliable.

What are the potential limitations of ultrasonic testing?

Ultrasonic flaw detection requires a trained operator who can set up a test with the aid of appropriate reference standards and properly interpret the results. Inspection of some complex geometries may be challenging. Ultrasonic thickness gages must be calibrated with respect to the material being measured, and applications requiring a wide range of thickness measurement or measurement of acoustically diverse materials may require multiple setups. Ultrasonic thickness gages are more expensive than mechanical measurement devices.

Ultrasonic Testing of Welds

One of the most useful characteristics of ultrasonic testing is its ability to determine the exact position of a discontinuity in a weld. This testing method requires a high level of operator training and competence and is dependant on the establishment and application of suitable testing procedures. This testing method can be used on ferrous and nonferrous materials, is often suited for testing thicker sections accessible from one side only, and can often detect finer lines or plainer defects which may not be as readily detected by radiographic testing.

+20 2 27950487
faik@faik.com
www.faik.com
7 Magless El Shaab St, Down Town, Cairo Egypt.

d. Liquid Penetrant Testing – PT

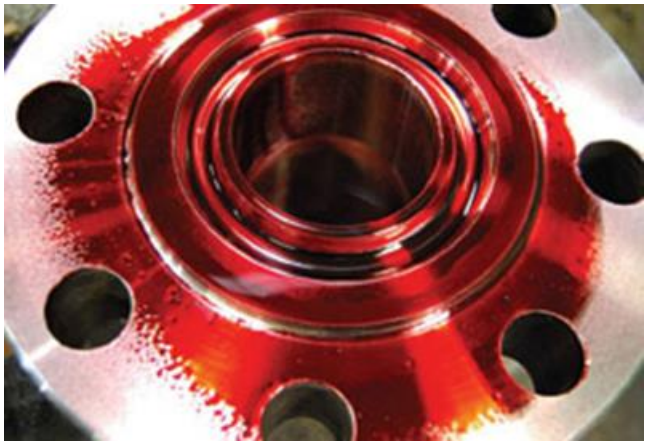

Dye Penetrant Inspection (DPI), also called Liquid Penetrant Inspection (LPI) or Penetrant Testing (PT), is one of the oldest and simplest NDT methods where its earliest versions (using kerosene and oil mixture) dates back to the 19th century.
Liquid penetrant inspection is used to detect any surface-connected discontinuities such as cracks from fatigue, quenching, and grinding, as well as fractures, porosity, incomplete fusion, and flaws in joints.

DPI is based upon capillary action, where surface tension fluid low penetrates into clean and dry surface-breaking discontinuities. Penetrant may be applied to the test component by dipping, spraying, or brushing. After adequate penetration time has been allowed, the excess penetrant is removed, a developer is applied. The developer helps to draw penetrant out of the flaw where an invisible indication becomes visible to the inspector. Inspection is performed under ultraviolet or white light, depending upon the type of dye used - fluorescent or no fluorescent (visible).

Materials

Penetrants are classified into sensitivity levels. Visible penetrants are typically red in color, and represent the lowest sensitivity. Fluorescent penetrants contain two or more dyes that fluoresce when excited by ultraviolet (UV-A) radiation (also known as black light). Since Fluorescent penetrant inspection is performed in a darkened environment, and the excited dyes emit brilliant yellow-green light that contrasts strongly against the dark background, this material is more sensitive to defects.

When selecting a sensitivity level one must consider many factors, including the environment under which the test will be performed, the surface finish of the specimen, and the size of defects sought. One must also assure that the test chemicals are compatible with the sample so that the examination will not cause permanent staining, or degradation. This technique can be quite portable, because in its simplest form the inspection requires only 3 aerosol spray cans, some lint free cloths, and adequate visible light. Stationary systems with dedicated application, wash, and development stations, are more costly and complicated, but result in better sensitivity and higher samples through-put.

Inspection steps

1- PRE-Cleaning
2- Application of Penetrant
3- Excess Penetrant Removal
4- Application of Developer
5- Inspection
6- Post Cleaning

+20 2 27950487
faik@faik.com
www.faik.com
7 Magless El Shaab St, Down Town, Cairo Egypt.

ADVANTAGES

1) High sensitivity (small discontinuities can be detected).
2) Few material limitations (metallic and nonmetallic, magnetic and nonmagnetic, and conductive and nonconductive materials may be inspected).
3) Rapid inspection of large areas and volumes.
4) Suitable for parts with complex shapes.
5) Indications are produced directly on the surface of the part and constitute a visual representation of the flaw.
6) Portable (materials are available in aerosol spray cans)
7) Low cost (materials and associated equipment are relatively inexpensive)

DISADVANTAGES

1) Only surface breaking defects can be detected.
2) Only materials with a relatively nonporous surface can be inspected.
3) Pre-cleaning is critical since contaminants can mask defects.
4) Metal smearing from machining, grinding, and grit or vapor blasting must be removed.
5) The inspector must have direct access to the surface being inspected.
6) Surface finish and roughness can affect inspection sensitivity.
7) Multiple process operations must be performed and controlled.
8) Post cleaning of acceptable parts or materials is required.
9) Chemical handling and proper disposal is required.

e. Magnetic Particle Testing – MT

Magnetic particle inspection (often abbreviated MT or MPI) is a nondestructive inspection method that provides detection of linear flaws located at or near the surface of ferromagnetic materials. It is viewed primarily as a surface examination method.

Magnetic Particle Inspection (MPI) is a very effective method for location of surface breaking and slight sub-surface defects such as cracking, pores, cold lap, lack of sidewall fusion in welds etc. in magnetic materials.

There are many different techniques. The most versatile technique is using a 110v AC hand held electromagnetic yoke magnet, a white strippable paint as contrast background and a magnetic "ink" composed of iron powder particles in a liquid carrier base.

The area is magnetized with the yoke magnet. In the event of a surface or slightly sub surface defect being present, the lines of magnetic force will deform around the defect.

The magnetic ink is applied and the iron powder particles will bridge the gap caused by the defect and give a visible indication against the white contrast background.

Magnetic Particle Inspection (MPI) provides very good defect resolution and is used extensively on:

Welded fabrications in magnetic material, Castings, Locating fatigue cracks in items subject to cyclical stress

+20 2 27950487
faik@faik.com
www.faik.com
7 Magless El Shaab St, Down Town, Cairo Egypt.

MAGNETIC PARTICLE INSPECTION PERFORMED IN FOUR STEPS:

1) Induce a magnetic field in the specimen
2) Apply magnetic particles to the specimen's surface
3) View the surface, looking for particle groupings that are caused by defects
4) Demagnetize and clean the specimen

ADVANTAGES OF MAGNETIC PARTICLE INSPECTION

1) Can find both surface and near sub-surface defects
2) Some inspection formats are extremely portable and low cost
3) Rapid inspection with immediate results
4) Indications are visible to the inspector directly on the specimen surface
5) Can detect defects that have been smeared over
6) Can inspect parts with irregular shapes (external splines, crankshafts, connecting rods, etc.)

LIMITATIONS OF MAGNETIC PARTICLE INSPECTION

1) The specimen must be ferromagnetic (e.g. steel, cast iron)
2) Paint thicker than about 0.005" must be removed before inspection
3) Post cleaning and post demagnetization is often necessary
4) Maximum depth sensitivity is typically quoted as 0.100" (deeper under perfect conditions)
5) Alignment between magnetic flux and defect is important

17. Calibration

All measurement, examination and test equipment used for acceptance of a Code item calibrated in accordance with this Section.

a. Calibration Procedures:

- All measurement, examination and test equipment is identified by marking the item or its container with a unique serial number.
- Each item is recorded on a List of Calibrated Equipment, which shows as a minimum, equipment description, serial number, frequency of calibration, and date of next calibration.
- The welding head team is responsible for maintaining all equipment in calibration, unless out of service and clearly marked "NOT CALIBRATED".
- Calibration may be performed by a qualified testing laboratory, which provides certified records of calibration, and has suitable standards whose accuracy is traceable to the National Standards or similar.
- The frequency of calibration is as determined from the manufacturer's recommendations, or from experience with the instrument.
- Pressure gauges used for hydrostatic, pneumatic or proof testing are calibrated against a dead-weight tester or calibrated master gauge once annually, and whenever there is reason to question their accuracy.
- The Level II using with a calibrated step wedge film, which is traceable to national standards, performs the calibration of the radiographic densitometer every 90 days. The densitometer or density step wedge comparison film is verified by the RT Level II Examiner, at the start of each 8-hour shift, or at each change of operator.

b. Calibration Records:

- Each calibrated instrument has a Calibration Control Card maintained by the TITLE OF RESPONSIBLE in the calibration file.
- All equipment is identified with a Calibration Sticker (Exhibit 11-3) which records the item, date of last calibration, and due date for the next calibration.
- Calibration records, including those of subcontractors who perform NDE, PWHT and mechanical testing, are available for review by the Authorized Inspector

18. Welding Procedure Qualification Report – WPQR

- Welding Procedure Specifications (WPS) are written to include all essential, nonessential and when required supplementary essential variables required for the process by ASME Code Section IX and the intended range of production welding. The head welding team witnesses the test coupon welding, recording the actual variables used in making the qualification test welds and the test results.
- Preparation and testing of the required test specimens is performed to meet Section IX and Section I, Section VIII Div.1, 2 & 3 requirements either in-house or by a external testing laboratory, the report of test results are reviewed by the head welding team witnesses. If acceptable, they prepare and certify, by signature and date, the Procedure Qualification Record (PQR).
- Copies of the qualified WPS's are provided to the Shop for use by production welders. The head welding team witnesses maintains the WPS and PQR file and is responsible for their distribution.
- The WPS's along with the supporting PQR´s are submitted to the Authorized Inspector for review and acceptance, and are available for review at any time.
- WPS's are revised whenever there is a change in a nonessential variable. A new WPS is prepared and qualified if an essential variable or when required a supplementary essential variable is changed.
- The Authorized Inspector may request re-qualification of a WPS at any time when there is reason to doubt the soundness of the weld being made using the specified WPS.

19. Welders Qualification Performance – WQP

- Welding Procedure Specifications are written to include all essential, nonessential and when required supplementary essential variables required for the process by ASME Code Section IX and the intended range of production welding. The TITLE OF RESPONSIBLE witnesses the test coupon welding, recording the actual variables used in making the qualification test welds and the test results.
- All welders and welding operators to be used for Code welding are qualified in accordance with Section IX, Section I and Section VIII Div.1, 2, & 3 under the supervision of the TITLE OF RESPONSIBLE.
- Preparation and testing of the required specimens are performed in house or by an external testing laboratory. The TITLE OF RESPONSIBLE reviews the test report and if acceptable, they prepare and certify the Welders or Welding Operators performance Qualification Record (WPQ), which documents the essential variables, actually used for the test weld, and the ranges qualified for production welding by these variables.
- Based on the WPQ the TITLE OF RESPONSIBLE prepares the List of Qualified Welders, which is distributed, to the TITLE OF RESPONSIBLE and only those welders or operators shall be assigned to Code work, within the qualified limits given. This list is reissued every six months or when revised.
- WPQ's or the ASME Qualified Welders List is available for review by the Authorized Inspector at any time.

- The Authorized Inspector may request re-qualification of a Welder or Welding Operator at any time they question their ability to deposit a sound weld or to follow the variables established in the WPS.

20. Attachments:

1) PQR-AWES D1.6
2) PQR-ASME Code IX
3) Liquid Test Procedures - LTP
4) Welding Procedure Specification: WPS – ASME Code IX – SS304L
5) Welding Procedure Specification: WPS – ASME Code IX – SS316L
6) Welding Procedure Specification: WPS – AWS D1.6 – ASTM A36
7) Welding Procedure Specification: WPS – AWS D1.6 – SS904L
8) Welders Qualification Performance – WQP

+20 2 27950487
faik@faik.com
www.faik.com
7 Magless El Shaab St, Down Town, Cairo Egypt.

Website: www.faik.com.eg

Procedure Qualification Record
PQR
According to AWS Code D1.6

PQR No :4

Sheet :1 of 2

Date : 30-12-2011

WELDING PROCEDURE SPECIFICATION (WPS) Yes ☐
PREQUALIFIED_____ QUALIFIED BY TESTING___
or PROCEDURE QUALIFICATION RECORDS (PQR) Yes ■

Company Name: **Bierrum Company**
Welding Process (es) : **GMAW**
Supporting PQR No.(s) : 4

Identification: PQR 4
Revision: **0** Date: **30-12-2011**
Type-Manual ☐ Semi-Automatic ■
Machine ☐ Automatic ☐

JOINT DESIGN USED
Type: **Butt**
Single ■ Double Weld ☐
Backing: Yes ■ No ☐
Backing Material: **904L / 1.4539**
Root Opening: **3.0 mm** Root Face Dimension --
Groove Angle: **60** Radius (J-U) --
Backing Gouging: Yes ☐ No ■ Method____

POSITION
Position of Groove: **F**_____Fillet:
Vertical Progression: Up ☐ Down ☐

ELECTRICAL CHARACATERISTICS
Transfer Mode (GMAW) Short-Circuiting ☐
Globular ■ Spray ☐
Current AC ☐ DCEP ■ DCEN ☐ Pulsed ☐
Tungsten Electrode (GTAW)
Size:_____ Type:_____

BASE METALS
Material Spec.: **904L / 1.4539**
Type or Grade_____
Thickness: Groove: **10 mm** _____Fillet:

FILLER METALS
AWS Specification: **SFA 5.9**
AWS Classification: **ER 385**

SHILDING
Flux_____ Gas: **Argon**
Composition: **100% Argon**
Electrode-Flux (class) __Flow Rate: **13-15 L/min**
_____Gas Cup Size: **#4**

TECHNIQUE
Stringer or Weave Bead: **Stringer**
Multi-pass or Single-pass (per side): **Multi**
Number of Electrodes: 1
Electrode Spacing Longitudinal: N A
Lateral: N A
Angle : N A
Contact Tube to work distance: **20-40 mm**
Peening: **None**
Interpass cleaning: **Brushing** (stainless steel)

PREHEAT
Preheat Temp. Min.: **ambient temp.**
Interpass Temp. Min.: **ambient temp.** Max: **100 C**

POST WELD HEAT TREATMENT
Temp.: **N A** Time: **N A**

Welding Procedure

Pass or weld layer	Process	Filler Metals		Current		Volts	Travel speed	Joint Details
		Class	Diam.	Type& polarity	Amps or wire feed speed			
1	GMAW	ER 385	1.2 mm	DCEP	170 – 200 A	22-24 V	--	
2	GMAW	ER 385	1.2 mm	DCEP	180 – 230 A	22-24 V		
3	GMAW	ER 385	1.2 mm	DCEP	180 – 220 A	22-24 V		
4	GMAW	ER 385	1.2 mm	DCEP	170 – 200 A	22-24 V		

	Manufacturer	Authorized
By	Engineer : Walied Faik	Mohammed G. Assal [CWI number 00010371]
Signature and date		AWS QC1 MOHAMMED G. ASSAL 00010371 CWI 30-12-11

FAIK فايق Website: www.faik.com.eg	***Procedure Qualification Record*** ***PQR*** ***According to AWS Code D1.6***	**PQR No :4** **Sheet :2 of 2** **Date :** 30-12-2011

TENSILE TEST

Specimen No.	Width mm(in)	Thickness mm(in)	Area $mm^2(in^2)$	Ultimate total load KN	Ultimate Unit Stress (MPa)	Type of Failure & Location
1	*18.2*	*9.36*	*170.4*	*108.4*	*636*	*Break out the weld- Ductile*
2	*17.52*	*9.59*	*168*	*101.9*	*607*	*Break out the weld- Ductile*

Guided-Bend Test

Type and Figure No.	Result	Type and Figure No.	Result
Face bend 1	ACC	Root bend 3	ACC
Face bend 2	ACC	Root bend 4	ACC

Visual inspection

Appearance : acceptable

Undercut : acceptable

Piping porosity : none

Test Date : 30-12-2011

Witnessed by :

Mohammed G. Assal [CWI number 00010371]

Radiographic Examination

RT report no. : **Result:**

Fillet weld test results

Minimum size multiple pass –Macroetch :

1 2 3

Maximum size multiple pass –Macroetch :

1 2 3

Other tests :

Welder's name: **AHMED HASSAN AHMED** **Stamp no. : 6**

We, the undersigned, certify that the statements in this record are correct and that the test welds, were prepared, welded, and Tested in conformance with the requirements of section 4 AWS D1.6 Structural Welding Code- Stainless Steel.

	Manufacturer	Authorized
By	Engineer : Walied Faik	Mohammed G. Assal [CWI number 00010371]
Signature and date		AWS QC 1 MOHAMMED G. ASSAL 00010371 CWI 30.12.11

بتروجت
PETROJET
CENTRAL WORKSHOP
QUALITY CONTROL DEPT.
Mechanical Lab.

Mechanical Test Report

Date :30/12/2011
Job No. : ---
Ser. No. : ---
Report No :186

Client : FAIK
Project : -----
Item : PQR -4
Material Number & Thickness :1.4539 (904 L) thk:10 mm
Applicable code or specification : AWS D1.6
Universal Testing m/c model / Serial No. : Tinius Olsen Testing Machine - 222000
Calibration specification : ASTM E4

Abbreviations:
CSA: Cross Sectional Area
A.B.: After Breaking.
Y.S.: Yield Stress
UTS: Ultimate Tensile Strength
G.L.: Gauge Length
E: Elongation
R: Reduction in Area
B.M :base metal

Specimen ☐Round ■ Rectangular ☐ Full Section ☐ Fasteners
Location ■ Transverse ☐Longitudinal ☐ Diagonal ■ weld ☐ B.M

1-Tensile Test

Sample ID	Heat No.	Plate/ Pipe No.	■Width ☐Diameter (mm)	Thickness (mm)	CSA(mm2)		Initial G.L. (mm)			G.L	E (%)	Load (KN)	Yield Stress ■ Graph ☐ extensometer		Y.S. (MPa)	Load (KN)	UTS (MPa)	Y.S. / UTS	Thread pitch	Breaking	
					Orig-inal	A.B	50	200	Other	A.B			0.2 %	0.5 %						weld	B.M
1	--	--	18.2	9.36	170.4	--	--	--	--	--	--	--	--	--	--	108.4	636	--	--	√	--
2	--	--	17.52	9.59	168	--	--	--	--	--	--	--	--	--	--	101.9	607	--	--	√	--

2-Guided Bend Test

Sample ID	Heat No.	Plate/ Pipe No.	Test Type			Specimen Size(mm)	Bend Angle	Mandrel Dia. (mm)	Results		
			Face	Root	Side				Accept	Reject	Remarks
1	--	--	√	--	--	10x38x250	180°	20	√		
2	--	--	√	--	--	10x38x250	180°	20	√		
3	--	--	--	√	--	10x38x250	180°	20	√		
4	--	--	--	√	--	10x38x250	180°	20	√		

Central Workshop Lab. Dept. Destructive Test Lab. Documents Approved Date: / /

	Lab. Engineer	Lab. Mgr.
Signature		
Date	30-12-11	

www.faik.com.eg

PROCEDURE QUALIFICATION RECORD

ACCORDING TO ASME CODE SECTION IX

Date : 23-12-2011

Sheet : 1 of 2

PQR No. : 3

WPS No.	:	3
Welding Process (es)	:	GTAW
Types: (Manual , Automatic, Semi Auto)	:	Manual

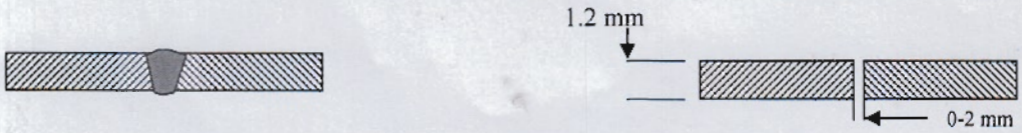

BASE METALS (QW-403)

MATERIALS SPECIFICATION	:	SA 240 Type 316 L
P.NO TO P.NO.	:	8
THICKNESS OF TEST COUPON(mm)	:	1.2 mm
DIAMETER OF TEST COUPON (mm)	:	N A

PWHT (QW-407) N A

TEMPERATURE (°C)	:	
TIME (H)	:	
HEATING RATE (C/HR)	:	
COOLING RATE: (C/HR)	:	

FILLER METALS (QW-404)

PROCESS (ES)	:	GTAW
SFA SPECIFICATION	:	N A
AWS CLASSIFICATION	:	---
FILLER METAL F-NO	:	---
WELD METALS A-NO.	:	---
ANALYSIS	:	---
SIZE OF FILLER METAL Φ (mm)	:	1.2 mm
BRAND NAME	:	
DEPOSIT WELD METAL (mm)	:	1.2 mm
TH. / PASS	:	

GAS (QW-408)

SHIELDING	:	100 % Argon (10-11 L/min)
TRAILING	:	----
BACKING	:	-----

ELECTRICAL CHARACTERISTICS (QW409)

PROCESS (ES)	:	GTAW
CURRENT	:	DC
POLARITY	:	EN
AMPS.	:	40-50
VOLTS	:	12-14
TUNGSTEN ELECT. SIZE/TYPE:		2.4 / Ew Th-2
HEAT INPUT (J / mm)	:	

POSITION (QW-405)

POSITION	:	1G
WELD PROGRESSION (UP - DOWN)	:	N A
OTHER	:	

TECHNIQUE (QW-410)

TRAVEL SPEED (CM/MIN)	:	
STRING OF WEAVE BEAD	:	Weave
OSCILLATION (MM)	:	None
MULTI PASS OR SINGLE PASS (PER SIDE)	:	Multi
SINGLE OR MULTIPLE ELECTRODES	:	Single
OTHER (QW-4140.3,11)	:	None

PREHEAT (QW-406)

PREHEAT TEMP C	:	ambient temp.
INTERPASS TEMPC	:	100 C
OTHER	:	

AWS QC 1 MOHAMMED G. ASSAL 00010371 CWI

FAIK فايق www.faik.com.eg	PROCEDURE QUALIFICATION RECORD ACCORDING TO ASME CODE SECTION IX	Date : 23-12-2011 Sheet : 2 of 2 PQR No. : 3

TENSILE TEST (QW-150)

Specimen No.	Width mm(in)	Thickness mm(in)	Area $mm^2(in^2)$	Ultimate total load KN	Ultimate Unit Stress (MPa)	Type of Failure & Location
1	29.22	1.4	40.9	20.1	491	Ductile out of weld
2	32.74	1.4	45.8	23.3	508	Ductile out of weld

Guided-Bend Test (QW-160)

Type and Figure No.	Result	Type and Figure No.	Result
Face 1	Acc	Root 1	Acc
Face 2	Acc	Root 2	Acc

Toughness Test (QW -170)

Specimen No.	Notch Location	Notch Type	Test Temp. (°c)	Impact		Lateral Expansion		Drop Weigh	
				Value (J)	average	% Shear	(mm)	Break	No Break

Welder' Name & Stamp : FAHD SAMER Stamp NO (5)

We certify that the statement in this record are correct and that the test welds were prepared, welded and tested in accordance with the requirements of Section IX of the ASME Code.

	Manufacturer	Authorized
By	Engineer : Walied Faik	Mohammed G. Assal [CWI number 00010371]
Signature and date	FAIK فايق	AWS QC1 MOHAMMED G. ASSAL 00010371 CWI 30-12-11

بتروجت
PETROJET
CENTRAL WORKSHOP
QUALITY CONTROL DEPT.
Mechanical Lab.

Mechanical Test Report

Date : 23/12/2011
Job No. : ---
Ser. No. : ---
Report No :167

Client : FAIK
Project : -----
Item : PQR -3
Material Number & Thickness : SA 240 type 316L thk:1.5 mm
Applicable code or specification : ASME IX
Universal Testing m/c model / Serial No. : Tinius Olsen Testing Machine - 222000
Calibration specification : ASTM E4

Abbreviations:
CSA: Cross Sectional Area
A.B.: After Breaking.
Y.S.: Yield Stress
UTS: Ultimate Tensile Strength
G.L.: Gauge Length
E: Elongation
R: Reduction in Area
B.M :base metal

Specimen ☐Round ■ Rectangular ☐ Full Section ☐ Fasteners
Location ■ Transverse ☐Longitudinal ☐ Diagonal ■ weld ☐ B.M

1-Tensile Test

Sample ID	Heat No.	Plate/ Pipe No.	■Width ☐Diameter (mm)	Thickness (mm)	CSA(mm2)		Initial G.L. (mm)			G.L A.B	E (%)	Load (KN)	Yield Stress ■ Graph ☐ extensometer		Y.S. (MPa)	Load (KN)	UTS (MPa)	Y.S. / UTS	Thread pitch	Breaking	
					Orig-inal	A.B	50	200	Other				0.2 %	0.5 %						weld	B.M
1	--	--	29.22	1.4	40.9	--	--	--	--	--	--	--	--	--	--	20.1	491	--	--	--	√
2	--	--	32.74	1.4	45.8	--	--	--	--	--	--	--	--	--	--	23.3	508	--	--	--	√

2-Guided Bend Test

Sample ID	Heat No.	Plate/ Pipe No.	Test Type			Specimen Size(mm)	Bend Angle	Mandrel Dia. (mm)	Results		
			Face	Root	Side				Accept	Reject	Remarks
1	--	--	√	--	--	1.5x38x250	180°	6	√	--	--
2	--	--	√	--	--	1.5x38x250	180°	6	√	--	--
3	--	--	--	√	--	1.5x38x250	180°	6	√	--	--
4	--	--	--	√	--	1.5x38x250	180°	6	√	--	--

Central Workshop Mechanical Dept. Destructive Test Lab Documents Approved Date: / /

	Lab. Engineer	Lab. Mgr.
Signature		
Date		

Assal Welding Services A pioneer company in welding, Mechanical testing, NDT and metallurgical investigation E mail : assal.welding.services@gmail.com	**Liquid Test Procedure**	Document No : PT -1 Date : 11-11-2011 Number of pages : 3

1- Scope

This procedure is applicable for Penetrant Examination method when it is used for detecting discontinuities which are open to the surface of non porous metal, typical discontinuities detectable by this method are cracks, seams, laps, cold shuts, laminations and porosity, and it can be used for ferrous & non ferrous base metal and welds.

2- Applicable References

ASME V Ed. 2007 Article 6
ASME VIII DIV 1 Ed. 2007 Appendix 8
AWS D1.1 ASTM E165 and Section 6 part C
AWS D1.6 Section 6 (6.29.6)

3- Personnel

1. Personnel shall be knowledgeable, trained and familiar with relevant codes, standards, specification, equipment and procedures.
2. Shall be qualified and certified according to applicable SNT-TC-1A.

4- Equipment

1- Color contrast solvent removable penetrant kits.
2- Wet non aqueous Developer kits.
3- Solvent cleaner kits.
4- Dry lint free clothes for wiping.

5- Control of Contaminants

For penetrant materials used on Ni-base alloys, Aust. S.S. shall include certificate that Sulphur and Halogens not exceed 1%

6- Surface preparation

Prior to the examination the surface to be examined and all adjacent area within 25 mm shall be dry and free from all dirt, grease, lint, scale, welding flux, weld spatter, paint, oil and any extraneous matter that obscure surface openings. The surface of the part to be examined may be is in as rolled condition or as welded. When the results may not be obtained the surface preparation by grinding, machining or other suitable methods shall be used.

FAIK

AWS Assal Welding Services

7- Pre – Examination Cleaning

Organic solvent cleaning shall be used, allow 2-5 minutes to evaporate by normal evaporation.

8- Examination (Applying penetrant)

1- Penetrant application by spraying.

2- Penetration dwell time:

Minimum time of penetrant = as indicated in the attached PQR.

Maximum time of penetrant = 30 Minutes

Notes:

1. In case of temperature between 5-10 ºC, minimum dwell time shall be two times the value stated.
2. The instruction of the manufacture shall be followed in case of conflict between the above and manufactures instruction, the later will prevail.

9- Method of excess pentrant removal

After the penetration dwell time has been elapsed, lint free dry shall be used first to remove excess penetrant, after that the remaining traces of penetrant shall be removed by lightly wiping the surface with the lint free cloth moistened with solvent, care should be taken to minimize removal of penetrant from the discontinuities (direct spraying of cleaner is prohibited), repeating the operation until most traces of penetrant has been removed, the movement of cloth preferred in one direction only and the surface dried by normal evaporation.

10- Method of applying developer

Non aqueous wet developer must be thoroughly agitated and applied by spraying only to a dry surface.

11- Time of applied developer

The developer shall be applied as soon as possible after 2-5 minutes.

12- Developer coating thickness

Care should be taken because insufficient coating thickness may not draw the penetrant out of discontinuity, excessive coating thickness may mask indication (a moderate even coating layer shall be applied), drying of the developer shall be by normal evaporation.

13- Developing time for final interpretation

Developing time for final interpretation shall be as soon as possible a wet developer coating is dry.

* The maximum developing time 60 minutes or as per manufacture recommendation.

14- Viewing condition

Natural or artificial, the minimum light intensity on the examined surface shall be not less than 1000 Lux

15- Surface temperatures

The temperature of the penetrant and surface to be examined shall be in the range of 5 - 52°C throughout the examination period or as manufacture recommendation, local heating or cooling is permitted provided the part temperature remains in the range of 5 - 52 °C during the examination, where it is not practical to comply with these temperature limitations, other temperature and time may be used, provide that the procedures are qualified as specified.

16- Technique for non standard temperatures

When it is not practical to conduct liquid penetrant examination within the temperature range 5 - 52 °C, the examination procedure at the proposed lower or higher temperature range requires re-qualification of the penetrant materials.

17- Post examination cleaning

By using dry cloth wetted with the applied family cleaner.

18- Final drying aid

By natural evaporation.

	prepared by
Name	Ismail Mostafa Galal
Signature	Ismail 22.01.2012

FAIK فايق

AWS Assal Welding Services

Website: www.faik.com.eg

Welding Procedure Specification (WPS)

According to ASME Code Section IX

WPS No. : 2
Date :
Client : Bierrum

Supporting PQR : 2

WELD SEQUENCES OF PASSES	1-N	JOINTS(QW 202)
WELDING PROCESS (ES) TYPES MANUAL, AUTOMATIC, SEMIAUTOMATIC	GTAW Manual	1-N
BACKING	Yes	

BASE METALS (QW-403)

MATERIAL SPECIFICATION	SB-625 UNSNo : N 08904(1.4539)
THICKNESS Range (mm)	1.2mm-2.4mm

FILLER METALS(QW-404)

DEPOSITED WELD THICKNESS RANGE UP TO	2.4 mm	
F NO.	--	
SFA SPEC.	--	
CLASSIFICATION (AWS / FLUX-WIRE)	SB-625 UNS No : N 08904	
SIZE OF FILLER METAL mm	1.2 mm	

POSITION (QW-405)

WELDING POSITION	1F	
PROGRESSION	-	

GAS(QW-408)

SHIELDING GAS-COMPOSITION AND FLOW RATE (L/MIN)	Argon (10-11 L/min)	

ELECTRICAL CHARACTERISTICS (QW-409)

CURRENT - POLARITY	DCEN	
AMPS. RANGE	40-50	
VOLTS RANGE	9-10	

TECHNIQUE(QW-410)

Bead Type (Weave or String)	weave	
Tungsten Electrode Size (mm) / Type	2.4 / EW-Th-2	
Multipass or Single Pass (per side)	Multi	
Single or Multiple Electrode	Single	
Cleaning (Interpass &Initial)	Brushing (stainless steel)	
Peening	None	
others	--	

PREHEAT(QW-406)

PREHEATING TEMPERATURE °C MIN.: Ambient temp.	INTERPASS TEMPERATURE°C MAX.: 100

POST WELD HEAT TREATMENT(QW-407)

Holding Temp. range : N A	Holding time range : N A

	Manufacturer	Certified by
By	Engineer : Wailed Faik	Mohammed G. Assal [CWI number 00010371]
Signature and date		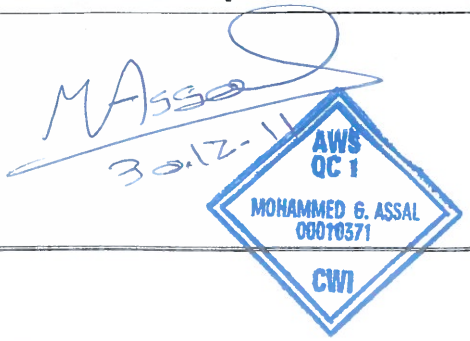

COMPAÑIA ESPAÑOLA DE LAMINACION, S.L.
OFICINAS: c/Ferralla,12 Pol.Ind. "SAN VICENTE"
08755 Castellbisbal (BARCELONA)
NIF: B-59/559351 Sociedad Unipersonal
Teléfono: +34 93 773 04 00 - Fax: +34 93 772 02 76
Calidad: +34 93 817 66 84 - Fax: +34 93 773 05 52

CELSA GROUP CELSA BARCELONA

Certified True Copy
Faik Company
Invoice: ----
Client: Bierrum Company
Client No.: CS-6840
Date: 29.1.2012

CERTIFICATE - RESULTS OF ASSAYS
UNE EN 10.204:2006, Type 3.1

Standard: ASTM
Type: A36
St. Mes.: A6/A6M
St. Tol.: A6/A6M
Our Ref: 01624490
(B08-31BEMB)

Customer: DBMSC-STEEL FZCO
P.O.BOX 2629
JEBEL ALI - DUBAI
Utd.Arab.Emir.

Destination: DBMSC-STEEL FZCO
CFR LO JEBEL ALI/ SHARJAH , UAE
Utd.Arab.Emir.

Delivery number: 200[illegible]0232
Order number : 1[illegible]21224
Your order : 0903169AE

Material	Heat Number	Quantity	CHEMICAL ANALYSIS															MECHANICAL PROP		
			C	Mn	Si	S	P	Cr	Ni	Cu	Mo	V	Nb	AL	N	Ti	CE	Yield Str.	Tensile Str.	A5
		MT	%	%	%	%	%	%	%	%	%	%	%	%	%	%	%	MPA	MPA	%
A36 100X8 L. 6.00m	CE542774	2.035	0.090	0.530	0.150	0.012	0.020	0.100	0.120	0.440	0.018	0.002	0.002	0.004	0.0101	0.001	0.240	320	450	38.0
A36 100X6 L. 6.00m	CE542775	8.140	0.080	0.550	0.140	0.019	0.021	0.100	0.100	0.420	0.015	0.002	0.002	0.004	0.0098	0.001	0.230	312	442	39.0
A36 70X10 L. 6.00m	CE543053	1.846	0.080	0.550	0.160	0.037	0.012	0.080	0.130	0.490	0.016	0.002	0.003	0.004	0.0104	0.001	0.233	312	442	37.0
A36 60X6 L. 6.00m	CE543121	2.035	0.090	0.550	0.170	0.039	0.016	0.090	0.110	0.520	0.021	0.002	0.002	0.004	0.0104	0.001	0.246	305	435	39.0
A36 60X6 L. 6,00m	CE543122	8.140	0.090	0.480	0.160	0.034	0.013	0.070	0.110	0.460	0.020	0.002	0.002	0.003	0.0099	0.001	0.226	310	440	39.0
A36 75X6 L. 6,00m	CE543121	11.448	0.090	0.550	0.150	0.036	0.014	0.100	0.190	0.480	0.022	0.002	0.002	0.003	0.0103	0.001	0.251	310	440	38.0
A36 50X10 L. 6,00m	CE543291	9.890	0.090	0.520	0.140	0.024	0.017	0.090	0.100	0.420	0.019	0.001	0.002	0.003	0.0104	0.001	0.233	307	448	38.0
A36 40X5 L. 6,00 m	CE543327	13.208	0.060	0.410	0.100	0.040	0.019	0.140	0.110	0.440	0.018	0.002	0.003	0.003	0.0108	0.001	0.197	335	443	39.3
A36 50X6 L. 6.00m	CE543388	18.400	0.090	0.550	0.150	0.027	0.019	0.100	0.120	0.460	0.018	0.001	0.000	0.003	0.0095	0.001	0.244	315	435	39.0

-Product suitable for galvanizing: 0.14<=Si<=0.25 & P<=0.035.
-Intended use: construction and civil engineering.
-Durability: not determined.
-Regulated substances: not determined

Castellbisbal,29.07.2010
Sergi Cabrerizo Sanjuan
Quality Control Manager

CERTIFIED TRUE COPY
DBMSC STEEL TRADING FZC
HAMRIYA FREEZONE SHARJAH - U.A.E.

DBMSC STEEL FZCO
QA / QC REVIEWED

COMPAÑIA ESPAÑOLA DE LAMINACION, S.L.
CELSA
CASTELLBISBAL

Website: www.faik.com.eg

Welding Procedure Specification (WPS)

According to ASME Code Section IX

WPS NO. : 3

Date : 28-12-2011

Client : Bierrum

Supporting PQR : 3

WELD SEQUENCES OF PASSES	*1-N*	**JOINTS(QW 202)**
WELDING PROCESS (ES) TYPES MANUAL, AUTOMATIC, SEMIAUTOMATIC	GTAW Manual	1-N
BACKING	Yes	

BASE METALS (QW-403)

MATERIAL SPECIFICATION	SA-240 Type 316
THICKNESS Range (mm)	1.2mm-2.4mm

FILLER METALS(QW-404)

DEPOSITED WELD THICKNESS RANGE UP TO	2.4 mm	
F NO.	--	
SFA SPEC.	--	
CLASSIFICATION (AWS / FLUX-WIRE)	SA-240 Type 316	
SIZE OF FILLER METAL mm (in)	1.2 mm	

POSITION (QW-405)

WELDING POSITION	1F	
PROGRESSION	-	

GAS(QW-408)

SHIELDING GAS-COMPOSITION AND FLOW RATE (L/MIN)	Argon (10-11 L/min)	

ELECTRICAL CHARACTERISTICS (QW-409)

CURRENT - POLARITY	DCEN	
AMPS. RANGE	40-50	
VOLTS RANGE	9-10	

TECHNIQUE(QW-410)

Bead Type (Weave or String)	weave	
Tungsten Electrode Size (mm) / Type	2.4 / EW-Th-2	
Multipass or Single Pass (per side)	Multi	
Single or Multiple Electrode	Single	
Cleaning (Interpass &Initial)	Brushing (stainless steel)	
Peening	None	
others	None	

PREHEAT(QW-406)

PREHEATING TEMPERATURE °C MIN.: Ambient temp.	INTERPASS TEMPERATURE°C MAX.: 100

POST WELD HEAT TREATMENT(QW-407)

Holding Temp. range : N A	Holding time range : N A

	Manufacturer	Certified by
By	Engineer: Walied Faik	Mohammed G. Assal [CWI number 00010371]
Signature and date	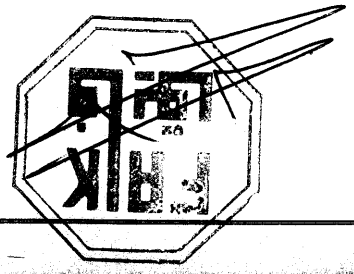	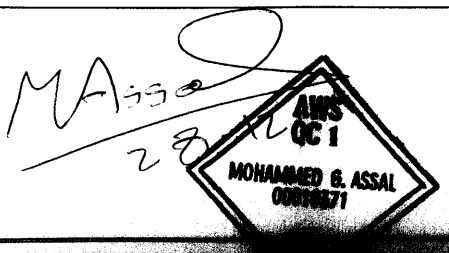

Website: www.faik.com.eg

Welding Procedure Specification (WPS) According to AWS Code D1.1

WPS No :1

Date : 28-12-2011

WELDING PROCEDURE SPECIFICATION (WPS) Yes ■
PREQUALIFIED_____ QUALIFIED BY TESTING___ ■
or PROCEDURE QUALIFICATION RECORDS (PQR) Yes □

Company Name: **Bierrum Company**
Welding Process (es) : **FCAW**
Supporting PQR No.(s) : **1**

Identification: **WPS 1**
Revision: **0** Date: **28-12-2011**
Type-Manual □ Semi-Automatic ■
Machine □ Automatic □

JOINT DESIGN USED
Type: **FILLET**
Single □ Double Weld □
Backing: Yes ■ No □
Backing Material: **ASTM A 36**
Root Opening -- Root Face Dimension --
Groove Angle: -- Radius (J-U) --
Backing Gouging: Yes □ No ■ Method___

POSITION
Position of Groove:_____ Fillet: **F,H**
Vertical Progression: Up □ Down □

ELECTRICAL CHARACATERISTICS
Transfer Mode (GMAW) Short-Circuiting □
Globular □ Spray □
Current AC □ DCEP ■ DCEN □ Pulsed □
Tungsten Electrode (GTAW)
Size:_____ Type:_____

BASE METALS
Material Spec.: **ASTM A 36**
Type or Grade _____
Thickness: Groove_____ Fillet: **6 mm**

FILLER METALS
AWS Specification: **SFA 5.20**
AWS Classification: **E 71T-1**

SHILDING
Flux_____ Gas: **Carbon Dioxide**
Composition: **100% CO2**
Electrode-Flux (class) _____ Flow Rate: **13-15 L/min**
Gas Cup Size: **#4**

TECHNIQUE
Stringer or Weave Bead: **Weave**
Multi-pass or Single-pass (per side): **Single**
Number of Electrodes: 1
Electrode Spacing Longitudinal: N A
Lateral: N A
Angle : N A
Contact Tube to work distance: **20-40 mm**
Peening: **N A**
Interpass cleaning: **Brushing**

PREHEAT
Preheat Temp. Min.: **ambient temp.**
Interpass Temp. Min.: **ambient temp.** Max: **170 C**

POST WELD HEAT TREATMENT
Temp.: **N A** Time: **N A**

Welding Procedure

Pass or weld layer	Process	Filler Metals		Current		Volts	Travel speed	Joint Details
		Class	Diam.	Type& polarity	Amps or wire feed speed			
1-n	FCAW	E 71T-1	1.2 mm	DCEP	120-160A 5.0-8.0 m/min	22-24 V	--	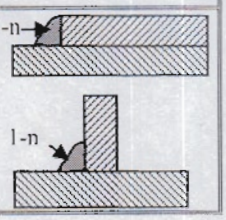

	Manufacturer	Authorized
By	Engineer : Walied Faik	Mohammed G. Assal [CWI number 00010371]
Signature and date		

FAIK فايق

Website: www.faik.com.eg

Welder Performance Qualification (WPQ)

Welder Name: Saied Mustafa Saied	stamp No:3	Date : 28-12-2011

Test Description

WPS followed : 1	Test Coupon : ■ Production weld : □
Specification of Base Metal(s) : ASTM A36	Thickness : 6 mm

Testing Conditions and Qualification Limits

Welding Variable	Record actual values	Qualification Range
Process/Type [Table 4.11,Item 1]	FCAW	FCAW
Electrode (single or multiple) [Table 4.11 Item 8]	single	single
Current / Polarity	DCEP	DCEP
Position [Table 4.11, Item 4]	F	F for groove F,H for fillet
Weld Progression [Table 4.11, Item 6]	N A	N A
Baking (Yes or No) [Table 4.11, Item (7)]	with backing	with backing
Material/Spec.	ASTM A 36 to ASTM A 36	All Group No 1
Base Metal		
Thickness: (Plate)		
Groove	6 mm	3mm- 12mm
Fillet		3mm - unlimited
Thickness: (Pipe/tube)		
Groove	N A	N A
Fillet	N A	N A
Diameter: (Pipe)		
Groove	N A	N A
Fillet	N A	N A
Filler Metal [Table 4.11, Item (3)]		
Spec. No.	5.20	5.20
Class	E 71T-1	
F-No. [Table 4.11, Item (2)]	6	6
Gas/Flux Type [Table 4.11, Item (3)]	CO2	shielding gas

Test Results

Visual Examination of complete weld (4.8.1) : Accepted

Guided Bend Test Results (4.30.5)

	1	2	3	4
Type				
Result				

Fillet Test Results (4.30.2.3 & 4.30.4.1)

Appearance:

Fracture Test Root Penetration:

Fillet Size: Macroetch:

Radiographic Test Results (4.30.3.1)

Result :		Interpreted by:	
Report No. :		Test No.:	Date : 28-12-2011

This welder was qualified by PQR 1

We, the undersigned, certify that the statements in this record are correct and that the test welds, were prepared, welded, and tested in conformance with the requirements of section 4 AWS D1.1/D1.1M, (2010) Structural Welding Code-Steel.

	Manufacturer	AWS QC Authorized
By	Engineer : Walied Faik	Mohammed G. Assal [CWI number 00010371]
Signature and date		28.12.11

Website: www.faik.com.eg	*Welding Procedure Specification (WPS)* *According to ASME Code Section IX*	WPS No. : 2 Date : Client : Bierrum

Supporting PQR : 2

WELD SEQUENCES OF PASSES	*1-N*	**JOINTS(QW 202)**
WELDING PROCESS (ES) TYPES MANUAL, AUTOMATIC, SEMIAUTOMATIC	GTAW Manual	1-N
BACKING	Yes	

BASE METALS (QW-403)

MATERIAL SPECIFICATION	SB-625 UNSNo : N 08904(1.4539)
THICKNESS Range (mm)	1.2mm-2.4mm

FILLER METALS(QW-404)

DEPOSITED WELD THICKNESS RANGE UP TO	2.4 mm	
F NO.	--	
SFA SPEC.	--	
CLASSIFICATION (AWS / FLUX-WIRE)	SB-625 UNS No : N 08904	
SIZE OF FILLER METAL mm	1.2 mm	

POSITION (QW-405)

WELDING POSITION	. 1F	
PROGRESSION	-	

GAS(QW-408)

SHIELDING GAS-COMPOSITION AND FLOW RATE (L/MIN)	Argon (10-11 L/min)	

ELECTRICAL CHARACTERISTICS (QW-409)

CURRENT - POLARITY	DCEN	
AMPS. RANGE	40-50	
VOLTS RANGE	9-10	

TECHNIQUE(QW-410)

Bead Type (Weave or String)	weave	
Tungsten Electrode Size (mm) / Type	2.4 / EW-Th-2	
Multipass or Single Pass (per side)	Multi	
Single or Multiple Electrode	Single	
Cleaning (Interpass &Initial)	Brushing (stainless steel)	
Peening	None	
others	--	

PREHEAT(QW-406)

PREHEATING TEMPERATURE °C MIN.: Ambient temp.	INTERPASS TEMPERATURE°C MAX.: 100

POST WELD HEAT TREATMENT(QW-407)

Holding Temp. range : N A	Holding time range : N A

	Manufacturer	Certified by
By	Engineer : Wailed Faik	Mohammed G. Assal [CWI number 00010371]
Signature and date		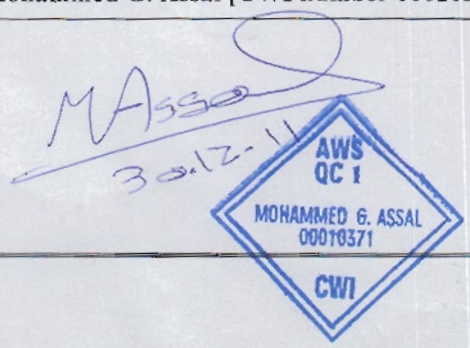

Welding Procedure Specification

" W.P.S. "

Location	Badr-City
Project	Steel Fabrication
Date	9 December 2020

Procedure Data

WPS no.	159 A
PQR no.	PREQUALIFIED
Code	AWS D1.1
Process	FCAW
Type	SIMIAUTOMATIC
Position	ALL

Joint

Design	DOUBLE BEVEL
Backing	NA
Backing type	
Back gouging	Air gouging / Grinding
Pipe / Pl.	PL.
Diameter	
Thickness	As detailed

Material

Material type	S235-S275 -S355	=	A36-A572-60
P no.	1	to	1
Group no.	1	to	1
Chemical	ASTM	to	ASTM

Filler metal

Filler metal class	E71T
Filler metal Size	1.2 mm
SFA Spec	A5.2
F no.	
A no.	
Deposited w.metal	t+3mm
Flux trade name	NA
Flux class	NA
Flux A/F no.	NA

Technique

String / Weave bead	Weave
Back gouging method	air gouging
Interpass cleaning	NA
Single / Multiple passes	Multiple
Trveling speed	Manual
Wire feed speed range	3.5M/MIN
Peening	NA
Orifice gase cup size	NA
Oscillation	NA
Single / Multiple electrode	Single
Contact tube to work distance	NA
Metal tranfere mode	NA
Remote Control	NA
Voltage Control	Manual
Consumable insert	NA
Others	NA

Post weld heat treatment

Temprature range	NA
Time range	NA
Heating range	NA
Cooling range	NA

Preheat

Preheat temp. min.	10 C
Interpass temp. max.	150 C
Preheat maintenance	21.5 C

Gases

Shielding gases	CO2
Percent composition	100%
Flow rate	NA
Gas Backing	NA
Trailing shielding gas composition	

Tungesten welding

GTAW Polarity	NA
GTAW Type	NA
Tungeten electrode type	NA
Tungeten electrode size	NA

Joint Detail

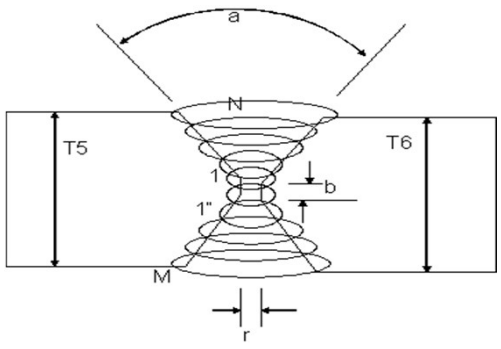

	Value	Tolerance
T5	25-60mm	
T6	25-60mm	
r	0-3mm	
a	60deg.	+/-5
b	0-2mm	

pass	Process	Filler metal	Dia	Amp. Range	Polarity	Volt range	Trveling speed	Remarks
1	FCAW	E71T	1.20	120-380	DC EP	18-35	manual	
2-N	FCAW	E71T	1.20	120-380	DC EP	18-35	manual	
1"	FCAW	E71T	1.20	120-380	DC EP	18-35	manual	
2"-M	FCAW	E71T	1.20	120-380	DC EP	18-35	manual	

Approvals

Welding Procedure Specification

" W.P.S. "

Location	Badr-City
Project	Steel Fabrication
Date	9 December 2020

Procedure Data

WPS no.	159 B
PQR no.	PREQUALIFIED
Code	AWS D1.1
Process	FCAW
Type	SIMIAUTOMATIC
Position	ALL

Joint

Design	SINGLE BEVEL
Backing	NA
Backing type	
Back gouging	Air gouging / Grinding
Pipe / Pl.	PL.
Diameter	
Thickness	As detailed

Material

Material type	S235-S275 -S355	=	A36-A572-60
P no.	1	to	1
Group no.	1	to	1
Chemical	ASTM	to	ASTM

Filler metal

Filler metal class	E71T
Filler metal Size	1.2 mm
SFA Spec	A5.2
F no.	
A no.	
Deposited w.metal	t+3mm
Flux trade name	NA
Flux class	NA
Flux A/F no.	NA

Technique

String / Weave bead	Weave
Back gouging method	air gouging
Interpass cleaning	NA
Single / Multiple passes	Multiple
Trveling speed	Manual
Wire feed speed range	3.5M/MIN
Peening	NA
Orifice gase cup size	NA
Oscillation	NA
Single / Multiple electrode	Single
Contact tube to work distance	NA
Metal tranfere mode	NA
Remote Control	NA
Voltage Control	Manual
Consumable insert	NA
Others	NA

Post weld heat treatment

Temprature range	NA
Time range	NA
Heating range	NA
Cooling range	NA

Preheat

Preheat temp. min.	10 C
Interpass temp. max.	150 C
Preheat maintenance	21.5 C

Gases

Shielding gases	CO2
Percent composition	100%
Flow rate	NA
Gas Backing	NA
Trailing shielding gas composition	

Tungesten welding

GTAW Polarity	NA
GTAW Type	NA
Tungeten electrode type	NA
Tungeten electrode size	NA

Joint Detail

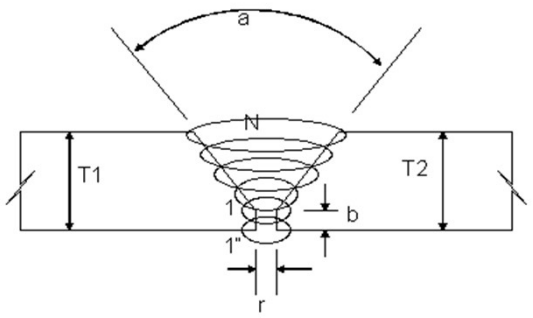

	Value	Tolerance
T1	8-25mm	
T2	8-25mm	
r	0-3mm	
a	60deg.	
b	0-2mm	

pass	Process	Filler metal	Dia	Amp. Range	Polarity	Volt range	Trveling speed	Remarks
1	FCAW	E71T	1.20	120-380	DC EP	18-35	manual	
2-N	FCAW	E71T	1.20	120-380	DC EP	18-35	manual	
1"	FCAW	E71T	1.20	120-380	DC EP	18-35	manual	

Approvals

Welding Procedure Specification

" W.P.S. "

Location	Badr-City
Project	Steel Fabrication
Date	9 December 2020

Procedure Data

WPS no.	159 C
PQR no.	PREQUALIFIED
Code	AWS D1.1
Process	FCAW
Type	SIMIAUTOMATIC
Position	ALL

Joint

Design	PARTIAL JOINT PENETRATION
Backing	NA
Backing type	
Back gouging	NA
Pipe / Pl.	PL.
Diameter	
Thickness	As detailed

Material

Material type	S235-S275 -S355	=	A36-A572-60
P no.	1	to	1
Group no.	1	to	1
Chemical	ASTM	to	ASTM

Filler metal

Filler metal class	E71T
Filler metal Size	1.2 mm
SFA Spec	A5.2
F no.	
A no.	
Deposited w.metal	t+3mm
Flux trade name	NA
Flux class	NA
Flux A/F no.	NA

Technique

String / Weave bead	Weave
Back gouging method	na
Interpass cleaning	NA
Single / Multiple passes	Multiple
Trveling speed	Manual
Wire feed speed range	3.5M/MIN
Peening	NA
Orifice gase cup size	NA
Oscillation	NA
Single / Multiple electrode	Single
Contact tube to work distance	NA
Metal tranfere mode	NA
Remote Control	NA
Voltage Control	Manual
Consumable insert	NA
Others	NA

Post weld heat treatment

Temprature range	NA
Time range	NA
Heating range	NA
Cooling range	NA

Preheat

Preheat temp. min.	10 C
Interpass temp. max.	150 C
Preheat maintenance	21.5 C

Gases

Shielding gases	CO2
Percent composition	100%
Flow rate	NA
Gas Backing	NA
Trailing shielding gas compos.	

Tungesten welding

GTAW Polarity	NA
GTAW Type	NA
Tungeten electrode type	NA
Tungeten electrode size	NA

Joint Detail

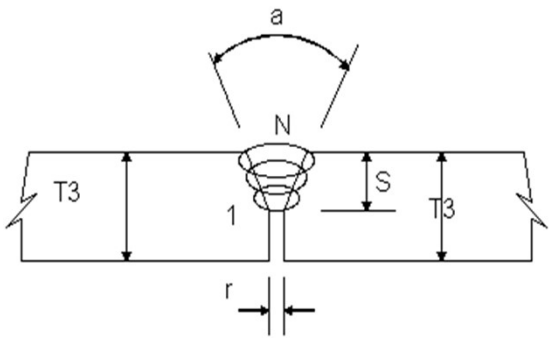

	Value	Tolerance
T3	ALL	
r	0-3mm	
a	60deg.	
S	REQUIRED PENETRATION	

pass	Process	Filler metal	Dia	Amp. Range	Polarity	Volt range	Trveling speed	Remarks
1	FCAW	E71T	1.20	120-380	DC EP	18-35	manual	
2-N	FCAW	E71T	1.20	120-380	DC EP	18-35	manual	

Approvals

Welding Procedure Specification

" W.P.S. "

Location	Badr-City
Project	Steel Fabrication
Date	9 December 2020

Procedure Data

WPS no.	159 D
PQR no.	PREQUALIFIED
Code	AWS D1.1
Process	FCAW
Type	SIMIAUTOMATIC
Position	ALL

Joint

Design	FILLET WELD
Backing	NA
Backing type	
Back gouging	NA
Pipe / Pl.	PL.
Diameter	
Thickness	As detailed

Material

Material type	S235-S275 -S355	=	A36-A572-60
P no.	1	to	1
Group no.	1	to	1
Chemical	ASTM	to	ASTM

Filler metal

Filler metal class	E71T
Filler metal Size	1.2 mm
SFA Spec	A5.2
F no.	
A no.	
Deposited w.metal	t+3mm
Flux trade name	NA
Flux class	NA
Flux A/F no.	NA

Technique

String / Weave bead	Weave
Back gouging method	na
Interpass cleaning	NA
Single / Multiple passes	Multiple
Trveling speed	Manual
Wire feed speed range	3.5M/MIN
Peening	NA
Orifice gase cup size	NA
Oscillation	NA
Single / Multiple electrode	Single
Contact tube to work distance	NA
Metal tranfere mode	NA
Remote Control	NA
Voltage Control	Manual
Consumable insert	NA
Others	NA

Post weld heat treatment

Temprature range	NA
Time range	NA
Heating range	NA
Cooling range	NA

Preheat

Preheat temp. min.	10 C
Interpass temp. max.	150 C
Preheat maintenance	21.5 C

Gases

Shielding gases	CO2
Percent composition	100%
Flow rate	NA
Gas Backing	NA
Trailing shielding gas composition	

Tungesten welding

GTAW Polarity	NA
GTAW Type	NA
Tungeten electrode type	NA
Tungeten electrode size	NA

Joint Detail

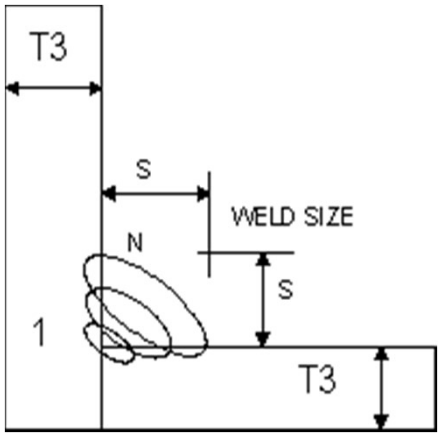

	Value	Tolerance
T3	ALL	
S	ALL	

pass	Process	Filler metal	Dia	Amp. Range	Polarity	Volt range	Trveling speed	Remarks
1	FCAW	E71T	1.20	120-380	DC EP	18-35	manual	
2-N	FCAW	E71T	1.20	120-380	DC EP	18-35	manual	

Approvals

Welding Procedure Specification

" W.P.S. "

Location	Badr-City
Project	Steel Fabrication
Date	9 December 2020

Procedure Data

WPS no.	159 E
PQR no.	PREQUALIFIED
Code	AWS D1.1
Process	FCAW
Type	SIMIAUTOMATIC
Position	ALL

Joint

Design	SQUARE JOINT
Backing	NA
Backing type	
Back gouging	NA
Pipe / Pl.	PL.
Diameter	
Thickness	As detailed

Material

Material type	S235-S275 -S355	=	A36-A572-60
P no.	1	to	1
Group no.	1	to	1
Chemical	ASTM	to	ASTM

Filler metal

Filler metal class	E71T
Filler metal Size	1.2 mm
SFA Spec	A5.2
F no.	
A no.	
Deposited w.metal	t+3mm
Flux trade name	NA
Flux class	NA
Flux A/F no.	NA

Technique

String / Weave bead	Weave
Back gouging method	na
Interpass cleaning	NA
Single / Multiple passes	Multiple
Trveling speed	Manual
Wire feed speed range	3.5M/MIN
Peening	NA
Orifice gase cup size	NA
Oscillation	NA
Single / Multiple electrode	Single
Contact tube to work distance	NA
Metal tranfere mode	NA
Remote Control	NA
Voltage Control	Manual
Consumable insert	NA
Others	NA

Post weld heat treatment

Temprature range	NA
Time range	NA
Heating range	NA
Cooling range	NA

Preheat

Preheat temp. min.	10 C
Interpass temp. max.	150 C
Preheat maintenance	21.5 C

Gases

Shielding gases	CO2
Percent composition	100%
Flow rate	NA
Gas Backing	NA
Trailing shielding gas composition	

Tungesten welding

GTAW Polarity	NA
GTAW Type	NA
Tungeten electrode type	NA
Tungeten electrode size	NA

Joint Detail

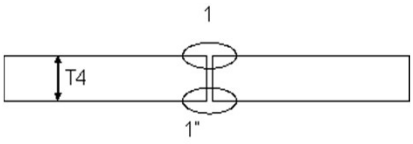

	Value	Tolerance
T4	ALL	

pass	Process	Filler metal	Dia	Amp. Range	Polarity	Volt range	Trveling speed	Remarks
1	FCAW	E71T	1.20	120-380	DC EP	18-35	manual	
1"	FCAW	E71T	1.20	120-380	DC EP	18-35	manual	

Approvals

WELDER QUALIFICATION CERTIFICATE

CLIENT	AL FAIK	Date	9/1/2020
Location	SITE WORKSHOP	Certificate No.	130
Project	CAIRO WEST SUPER CRITICAL P.S.	Expiry	9/1/2021

Name	HANY ABD EL-TAWAB
Stamp	S9
ID No.	
WTR. No.	135
Lab. Test No.	138
Tested By	Q MASTERS
PRORESSION	UPHILL

Test Result

Mechanical Guided Bent Test

FACE BEND	PASS 2 SAMPLE
ROOT BEND	PASS 2 SAMPLE
Long R/F	NA

Fillet Weld

Macro	NA
BREAK BEND	NA

Visual

CAP	ACCEPT

NDT

RT	NA
UT	PASS
PT/MT	NA

	Test	Qualification
Process	SMAW	SMAW
Type	MANUAL	MANUAL
WPS no.	AWS D1.1	AWS D1.1
Joint Design	GROOVE	ALL
Backing	NA	NA
Material	S355	S235-275-355
Thickness	12	OVER 3 MM
Position	4G	1-4 G - F
Dia. Pl.	PLATE	3:24 MM
Electrode	E7018	E7018
Elect. Size	1.2	1.2
SFA Spec	5.18	
Deposited Weld Metal	T+3	ALL
Gas Type	NA	
GMAW Trans Mode	NA	
GTAW Polarity	NA	
GTAW Type	NA	
Remote Control	NA	
Voltage Control	YES	
Consumable Insert	NO	
Flux	NA	
Flux A/F no.	NA	

We certify that the above records are correct and the test coupons were prepared and tested according to the requirements of AWS D1.1Code.

Approvals

QUALITY MASTERS
QUALITY CONTROL DEPARTMENT

شركة الفايق للهندسه والتجارة
ش.م.م
FAIK
S.A.E
Al Faik for Engineering&Trading

Welder Identification Card

Name	HANY ABD EL-TAWAB
Stamp	S9
ID No.	0
WTR No.	135
Lab Test No.	138
Tested By	Q MASTERS
Company	STEEL LINK
Project	STEEL STRUCTURE
Approvals	SITE

Process	SMAW
Material	AWSD1.1
Electrode	E7018
Position	1.4 G F
Pl. / Pipe / dia	OVER 24 "
Thickness	3 :24 MM
Backing	NA
Shielding gas	NA

This card is cleared for the mentioned limits only , and may removed on the job if in the opinion of the inspection engineer , the weld quality is not satisfactory

Employer Approval

QUALITY MASTERS
ENGINEERING COMPANY FOR DISTINCT WORKS
6 EL SHERIF STREET - ASWAN STREET - HELIOPOLIS - CAIRO
TEL. FAX. : 002-02-6345720 MOBILE : 0101676644 / 0101459458
E MAIL : qmasters2004@yahoo.com -- qualitymasters@yahoo.com

كواليـــتى ماســـــترز
الشـــركه الهندســـيه للاعمـــــال المتميـــزه
عمـــارات الشريـــف رقم 6 - شارع اســـوان - مصـــر الجديده - القـــاهره
تليـــفون / فـــاكس : 002-02-6345720 محمول : 0101676644 / 0101459458
بريـــد اليكترونى :

WELDER QUALIFICATION CERTIFICATE

CLIENT	AL FAIK
Location	SITE WORKSHOP
Project	CAIRO WEST SUPER CRITICAL P.S.

Date	9/1/2020
Certificate No.	131
Expiry	9/1/2021

Name	HANY ABD EL-TAWAB
Stamp	S9
ID No.	
WTR. No.	136
Lab. Test No.	139
Tested By	Q MASTERS
PRORESSION	UPHILL

Test Result

Mechanical Guided Bent Test

FACE BEND	PASS 2 SAMPLE
ROOT BEND	PASS 2 SAMPLE
Long R/F	NA

Fillet Weld

Macro	NA
BREAK BEND	NA

Visual

CAP	ACCEPT

NDT

RT	NA
UT	PASS
PT/MT	NA

	Test	Qualification
Process	SMAW	SMAW
Type	MANUAL	MANUAL
WPS no.	AWS D1.1	AWS D1.1
Joint Design	GROOVE	ALL
Backing	NA	NA
Material	S355	S235-275-355
Thickness	12	OVER 3 MM
Position	3G	1-2-3- G - F
Dia. Pl.	PLATE	3:24 MM
Electrode	E7018	E7018
Elect. Size	1.2	1.2
SFA Spec	5.18	
Deposited Weld Metal	T+3	ALL
Gas Type	NA	
GMAW Trans Mode	NA	
GTAW Polarity	NA	
GTAW Type	NA	
Remote Control	NA	
Voltage Control	YES	
Consumable Insert	NO	
Flux	NA	
Flux A/F no.	NA	

We certify that the above records are correct and the test coupons were prepared and tested according to the requirements of AWS D1.1Code.

Approvals

QUALITY MASTERS
QUALITY CONTROL DEPARTMENT

شركة الفايق للهندسه والتجارة
ش م م
S.A.E
Al Faik for Engineering&Trading

Welder Identification Card

Name	HANY ABD EL-TAWAB
Stamp	S9
ID No.	0
WTR No.	136
Lab Test No.	139
Tested By	Q MASTERS
Company	STEEL LINK
Project	STEEL STRUCTURE
Approvals	SITE

Process	SMAW
Material	AWSD1.1
Electrode	E7018
Position	1.2.3 G F
Pl. / Pipe / dia	OVER 24 "
Thickness	3 :24 MM
Backing	NA
Shielding gas	NA

This card is cleared for the mentioned limits only , and may removed on the job if in the opinion of the inspection engineer , the weld quality is not satisfactory

Employer Approval

QUALITY MASTERS
ENGINEERING COMPANY FOR DISTINCT WORKS
6 EL SHERIF STREET - ASWAN STREET - HELIOPOLIS - CAIRO
TEL. FAX. : 002-02-6345720 MOBILE : 0101676644 / 0101459458
E MAIL : qmasters2004@yahoo.com – qualitymasters@yahoo.com

كواليـــتى ماســـــترز
الشـــركه الهندســيه للاعمـــــال المتميـــزه
عمـــارات الشريـــف رقـم 6 - شارع اســوان - مصـــر الجديده - القـــاهره
تليـفون / فـاكس : 002-02-6345720 محمول : 0101676644 / 0101459458
بريـــد اليـكترونى :

WELDER QUALIFICATION CERTIFICATE

CLIENT	AL FAIK
Location	SITE WORKSHOP
Project	CAIRO WEST SUPER CRITICAL P.S.

Date	9/1/2020
Certificate No.	132
Expiry	9/1/2021

Name	HANY ABD EL-TAWAB
Stamp	S9
ID No.	
WTR. No.	137
Lab. Test No.	140
Tested By	Q MASTERS
PRORESSION	UPHILL

Test Result

Mechanical Guided Bent Test

FACE BEND	PASS 2 SAMPLE
ROOT BEND	PASS 2 SAMPLE
Long R/F	NA

Fillet Weld

Macro	NA
BREAK BEND	NA

Visual

CAP	ACCEPT

NDT

RT	NA
UT	PASS
PT/MT	NA

	Test	Qualification
Process	FCAW	FCAW
Type	SIMI AUO	SIMI AUO
WPS no.	AWS D1.1	AWS D1.1
Joint Design	GROOVE	ALL
Backing	NA	NA
Material	S355	S235-275-355
Thickness	12	OVER 3 MM
Position	3G	1-2-3- G
Dia. Pl.	PLATE	3:24 MM
Electrode	E71T	E71T
Elect. Size	1.2	1.2
SFA Spec	5.18	
Deposited Weld Metal	T+3	ALL
Gas Type	CO2	CO2
GMAW Trans Mode	NA	
GTAW Polarity	NA	
GTAW Type	NA	
Remote Control	NA	
Voltage Control	YES	
Consumable Insert	NO	
Flux	NA	
Flux A/F no.	NA	

We certify that the above records are correct and the test coupons were prepared and tested according to the requirements of AWS D1.1Code.

Approvals

QUALITY MASTERS
QUALITY CONTROL DEPARTMENT

شركة الفايق للهندسة والتجارة
ش.م.م
SAE
Al Faik for Engineering&Trading

Welder Identification Card

Name	HANY ABD EL-TAWAB
Stamp	S9
ID No.	0
WTR No.	137
Lab Test No.	140
Tested By	Q MASTERS
Company	STEEL LINK
Project	STEEL STRUCTURE
Approvals	SITE

Process	FCAW
Material	AWSD1.1
Electrode	E71T
Position	1.2.3 G F
Pl. / Pipe / dia	OVER 24 "
Thickness	3 MM AND OVER
Backing	NA
Shielding gas	CO2

This card is cleared for the mentioned limits only , and may removed on the job if in the opinion of the inspection engineer , the weld quality is not satisfactory

Employer Approval

QUALITY MASTERS
ENGINEERING COMPANY FOR DISTINCT WORKS
6 EL SHERIF STREET - ASWAN STREET - HELIOPOLIS - CAIRO
TEL. FAX. : 002-02-6345720 MOBILE : 0101676644 / 0101459458
E MAIL : qmasters2004@yahoo.com – qualitymasters@yahoo.com

كواليـــتى ماســـــترز
الشـــركه الهندســـيه للاعمـــــال المتميـــزه
عمـــارات الشريـــف رقـم 6 - شارع اســـوان - مصـــر الجديده - القـــاهره
تليـفون / فـاكس : 002-02-6345720 محمول : 0101676644 / 0101459458
بريـــد اليكترونى :

WELDER QUALIFICATION CERTIFICATE

CLIENT	AL FAIK	Date	9/1/2020
Location	SITE WORKSHOP	Certificate No.	127
Project	CAIRO WEST SUPER CRITICAL P.S.	Expiry	9/1/2021

Name	MAHMOUD ABD EL-TAWAB	
Stamp	S8	
ID No.		
WTR. No.	132	
Lab. Test No.	135	
Tested By	Q MASTERS	
PRORESSION	UPHILL	

	Test	Qualification
Process	SMAW	SMAW
Type	MANUAL	MANUAL
WPS no.	AWS D1.1	AWS D1.1
Joint Design	GROOVE	ALL
Backing	NA	NA
Material	S355	S235-275-355
Thickness	12	OVER 3 MM
Position	4G	1-4 G - F
Dia. Pl.	PLATE	3:24 MM
Electrode	E7018	E7018
Elect. Size	1.2	1.2
SFA Spec	5.18	
Deposited Weld Metal	T+3	ALL
Gas Type	NA	
GMAW Trans Mode	NA	
GTAW Polarity	NA	
GTAW Type	NA	
Remote Control	NA	
Voltage Control	YES	
Consumable Insert	NO	
Flux	NA	
Flux A/F no.	NA	

Test Result

Mechanical Guided Bent Test

FACE BEND	PASS 2 SAMPLE
ROOT BEND	PASS 2 SAMPLE
Long R/F	NA

Fillet Weld

Macro	NA
BREAK BEND	NA

Visual

CAP	ACCEPT

NDT

RT	NA
UT	PASS
PT/MT	NA

We certify that the above records are correct and the test coupons were prepared and tested according to the requirements of AWS D1.1Code.

Approvals

QUALITY MASTERS
QUALITY CONTROL DEPARTMENT

شركة الفايق للهندسة والتجارة
ش.م.م
S.A.E
AL Faik for Engineering&Trading

Welder Identification Card

Name	MAHMOUD ABD EL-TAWAB	
Stamp	S8	
ID No.	0	
WTR No.	132	
Lab Test No.	135	
Tested By	Q MASTERS	
Company	STEEL LINK	
Project	STEEL STRUCTURE	
Approvals	SITE	

Process	SMAW
Material	AWSD1.1
Electrode	E7018
Position	1.4 G F
Pl. / Pipe / dia	OVER 24 "
Thickness	3 :24 MM
Backing	NA
Shielding gas	NA

This card is cleared for the mentioned limits only , and may removed on the job if in the opinion of the inspection engineer , the weld quality is not satisfactory

Employer Approval

QUALITY MASTERS
ENGINEERING COMPANY FOR DISTINCT WORKS
6 EL SHERIF STREET - ASWAN STREET - HELIOPOLIS - CAIRO
TEL. FAX. : 002-02-6345720 MOBILE : 0101676644 / 0101459458
E MAIL : qmasters2004@yahoo.com – qualitymasters@yahoo.com

كواليتى ماسترز
الشركه الهندسيه للاعمال المتميزه
عمارات الشريف رقم 6 - شارع اسوان - مصر الجديده - القاهره
تليفون / فاكس : 002-02-6345720 محمول : 0101676644 / 0101459458
بريد اليكترونى :

WELDER QUALIFICATION CERTIFICATE

CLIENT	AL FAIK	Date	9/1/2020
Location	SITE WORKSHOP	Certificate No.	128
Project	CAIRO WEST SUPER CRITICAL P.S.	Expiry	9/1/2021

Name	MAHMOUD ABD EL-TAWAB
Stamp	S8
ID No.	
WTR. No.	133
Lab. Test No.	136
Tested By	Q MASTERS
PRORESSION	UPHILL

	Test	Qualification
Process	SMAW	SMAW
Type	MANUAL	MANUAL
WPS no.	AWS D1.1	AWS D1.1
Joint Design	GROOVE	ALL
Backing	NA	NA
Material	S355	S235-275-355
Thickness	12	OVER 3 MM
Position	3G	1-2-3- G - F
Dia. Pl.	PLATE	3:24 MM
Electrode	E7018	E7018
Elect. Size	1.2	1.2
SFA Spec	5.18	
Deposited Weld Metal	T+3	ALL
Gas Type	NA	
GMAW Trans Mode	NA	
GTAW Polarity	NA	
GTAW Type	NA	
Remote Control	NA	
Voltage Control	YES	
Consumable Insert	NO	
Flux	NA	
Flux A/F no.	NA	

Test Result

Mechanical Guided Bent Test

FACE BEND	PASS 2 SAMPLE
ROOT BEND	PASS 2 SAMPLE
Long R/F	NA

Fillet Weld

Macro	NA
BREAK BEND	NA

Visual

CAP	ACCEPT

NDT

RT	NA
UT	PASS
PT/MT	NA

We certify that the above records are correct and the test coupons were prepared and tested according to the requirements of AWS D1.1Code.

Approvals

QUALITY MASTERS — QUALITY CONTROL DEPARTMENT

Welder Identification Card

Name	MAHMOUD ABD EL-TAWAB
Stamp	S8
ID No.	0
WTR No.	133
Lab Test No.	136
Tested By	Q MASTERS
Company	STEEL LINK
Project	STEEL STRUCTURE
Approvals	SITE

Process	SMAW
Material	AWSD1.1
Electrode	E7018
Position	1.2.3 G F
Pl. / Pipe / dia	OVER 24 "
Thickness	3 :24 MM
Backing	NA
Shielding gas	NA

This card is cleared for the mentioned limits only , and may removed on the job if in the opinion of the inspection engineer , the weld quality is not satisfactory

Employer Approval

QUALITY MASTERS
ENGINEERING COMPANY FOR DISTINCT WORKS
6 EL SHERIF STREET - ASWAN STREET - HELIOPOLIS - CAIRO
TEL. FAX. : 002-02-6345720 MOBILE : 0101676644 / 0101459458
E MAIL : qmasters2004@yahoo.com – qualitymasters@yahoo.com

كواليـــتى ماســـــترز
الشـــركه الهندســـيه للاعمـــــال المتميـــزه
عمـــارات الشريـــف رقـم 6 - شارع اســوان - مصـــر الجديده - القـــاهره
تليـفون / فـاكس : 002-02-6345720 محمول : 0101676644 / 0101459458
بريـــد اليكترونى :

WELDER QUALIFICATION CERTIFICATE

CLIENT	AL FAIK	Date	9/1/2020
Location	SITE WORKSHOP	Certificate No.	129
Project	CAIRO WEST SUPER CRITICAL P.S.	Expiry	9/1/2021

Name	MAHMOUD ABD EL-TAWAB	
Stamp	S8	
ID No.		
WTR. No.	134	
Lab. Test No.	137	
Tested By	Q MASTERS	
PRORESSION	UPHILL	

	Test	Qualification
Process	FCAW	FCAW
Type	SIMI AUO	SIMI AUO
WPS no.	AWS D1.1	AWS D1.1
Joint Design	GROOVE	ALL
Backing	NA	NA
Material	S355	S235-275-355
Thickness	12	OVER 3 MM
Position	3G	1-2-3- G
Dia. Pl.	PLATE	3:24 MM
Electrode	E71T	E71T
Elect. Size	1.2	1.2
SFA Spec	5.18	
Deposited Weld Metal	T+3	ALL
Gas Type	CO2	CO2
GMAW Trans Mode	NA	
GTAW Polarity	NA	
GTAW Type	NA	
Remote Control	NA	
Voltage Control	YES	
Consumable Insert	NO	
Flux	NA	
Flux A/F no.	NA	

Test Result

Mechanical Guided Bent Test

FACE BEND	PASS 2 SAMPLE
ROOT BEND	PASS 2 SAMPLE
Long R/F	NA

Fillet Weld

Macro	NA
BREAK BEND	NA

Visual

CAP	ACCEPT

NDT

RT	NA
UT	PASS
PT/MT	NA

We certify that the above records are correct and the test coupons were prepared and tested according to the requirements of AWS D1.1Code.

Approvals

QUALITY MASTERS QC-3 QUALITY CONTROL DEPARTMENT

شركة الفايق للهندسه والتجاره ش.م.م AL Faik for Engineering&Trading S.A.E

Welder Identification Card

Name	MAHMOUD ABD EL-TAWAB
Stamp	S8
ID No.	0
WTR No.	134
Lab Test No.	137
Tested By	Q MASTERS
Company	STEEL LINK
Project	STEEL STRUCTURE
Approvals	SITE

Process	FCAW
Material	AWSD1.1
Electrode	E71T
Position	1.2.3 G F
Pl. / Pipe / dia	OVER 24 "
Thickness	3 MM AND OVER
Backing	NA
Shielding gas	CO2

This card is cleared for the mentioned limits only , and may removed on the job if in the opinion of the inspection engineer , the weld quality is not satisfactory

Employer Approval

QUALITY MASTERS
ENGINEERING COMPANY FOR DISTINCT WORKS
6 EL SHERIF STREET - ASWAN STREET - HELIOPOLIS - CAIRO
TEL. FAX. : 002-02-6345720 MOBILE : 0101676644 / 0101459458
E MAIL : qmasters2004@yahoo.com – qualitymasters@yahoo.com

كواليـــتى ماســـــترز
الشـــركه الهندســـيه للاعمـــــال المتميـــزه
عمـــارات الشريـــف رقـم 6 - شارع اســوان - مصـــر الجديده - القـــاهره
تليـفون / فـاكس : 002-02-6345720 محمول : 0101676644 / 0101459458
بريـــد اليكترونى :

WELDER QUALIFICATION CERTIFICATE

CLIENT	AL FAIK
Location	SITE WORKSHOP
Project	CAIRO WEST SUPER CRITICAL P.S.

Date	9/1/2020
Certificate No.	124
Expiry	9/1/2021

Name	MOHAMED ABD EL-WAHAB M. S
Stamp	S7
ID No.	
WTR. No.	129
Lab. Test No.	132
Tested By	Q MASTERS
PRORESSION	UPHILL

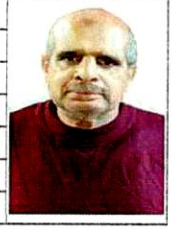

Test Result

Mechanical Guided Bent Test

FACE BEND	PASS 2 SAMPLE
ROOT BEND	PASS 2 SAMPLE
Long R/F	NA

Fillet Weld

Macro	NA
BREAK BEND	NA

Visual

CAP	ACCEPT

NDT

RT	NA
UT	PASS
PT/MT	NA

	Test	Qualification
Process	SMAW	SMAW
Type	MANUAL	MANUAL
WPS no.	AWS D1.1	AWS D1.1
Joint Design	GROOVE	ALL
Backing	NA	NA
Material	S355	S235-275-355
Thickness	12	OVER 3 MM
Position	4G	1-4 G - F
Dia. Pl.	PLATE	3:24 MM
Electrode	E7018	E7018
Elect. Size	1.2	1.2
SFA Spec	5.18	
Deposited Weld Metal	T+3	ALL
Gas Type	NA	
GMAW Trans Mode	NA	
GTAW Polarity	NA	
GTAW Type	NA	
Remote Control	NA	
Voltage Control	YES	
Consumable Insert	NO	
Flux	NA	
Flux A/F no.	NA	

We certify that the above records are correct and the test coupons were prepared and tested according to the requirements of AWS D1.1Code.

Approvals

AL Faik for Engineering&Trading S.A.E

QUALITY MASTERS

QUALITY CONTROL DEPARTMENT

Welder Identification Card

Name	MOHAMED ABD EL-WAHAB M. S
Stamp	S7
ID No.	0
WTR No.	129
Lab Test No.	132
Tested By	Q MASTERS
Company	STEEL LINK
Project	STEEL STRUCTURE
Approvals	SITE

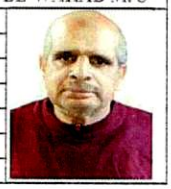

Process	SMAW
Material	AWSD1.1
Electrode	E7018
Position	1.4 G F
Pl. / Pipe / dia	OVER 24 "
Thickness	3 :24 MM
Backing	NA
Shielding gas	NA

This card is cleared for the mentioned limits only , and may removed on the job if in the opinion of the inspection engineer , the weld quality is not satisfactory

Employer Approval

QUALITY MASTERS
ENGINEERING COMPANY FOR DISTINCT WORKS
6 EL SHERIF STREET - ASWAN STREET - HELIOPOLIS - CAIRO
TEL. FAX. : 002-02-6345720 MOBILE : 0101676644 / 0101459458
E MAIL : qmasters2004@yahoo.com – qualitymasters@yahoo.com

كواليتى ماسترز
الشركه الهندسيه للاعمال المتميزه
عمارات الشريف رقم 6 - شارع اسوان - مصر الجديده - القاهره
تليفون / فاكس : 002-02-6345720 محمول : 0101676644 / 0101459458
بريد اليكترونى :

WELDER QUALIFICATION CERTIFICATE

CLIENT	AL FAIK
Location	SITE WORKSHOP
Project	CAIRO WEST SUPER CRITICAL P.S.

Date	9/1/2020
Certificate No.	125
Expiry	9/1/2021

Name	MOHAMED ABD EL-WAHAB M. S
Stamp	S7
ID No.	
WTR. No.	130
Lab. Test No.	133
Tested By	Q MASTERS
PROGRESSION	UPHILL

Test Result

Mechanical Guided Bent Test

FACE BEND	PASS 2 SAMPLE
ROOT BEND	PASS 2 SAMPLE
Long R/F	NA

Fillet Weld

Macro	NA
BREAK BEND	NA

Visual

CAP	ACCEPT

NDT

RT	NA
UT	PASS
PT/MT	NA

	Test	Qualification
Process	SMAW	SMAW
Type	MANUAL	MANUAL
WPS no.	AWS D1.1	AWS D1.1
Joint Design	GROOVE	ALL
Backing	NA	NA
Material	S355	S235-275-355
Thickness	12	OVER 3 MM
Position	3G	1-2-3- G - F
Dia. Pl.	PLATE	3:24 MM
Electrode	E7018	E7018
Elect. Size	1.2	1.2
SFA Spec	5.18	
Deposited Weld Metal	T+3	ALL
Gas Type	NA	
GMAW Trans Mode	NA	
GTAW Polarity	NA	
GTAW Type	NA	
Remote Control	NA	
Voltage Control	YES	
Consumable Insert	NO	
Flux	NA	
Flux A/F no.	NA	

We certify that the above records are correct and the test coupons were prepared and tested according to the requirements of AWS D1.1Code.

Approvals

QUALITY MASTERS QUALITY CONTROL DEPARTMENT

شركة الفائق للهندسة والمقاولات ش.م.م S.A.E ③ AL Faik for Engineering&Trading

Welder Identification Card

Name	MOHAMED ABD EL-WAHAB M. S
Stamp	S7
ID No.	0
WTR No.	130
Lab Test No.	133
Tested By	Q MASTERS
Company	STEEL LINK
Project	STEEL STRUCTURE
Approvals	SITE

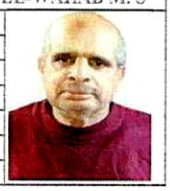

Process	SMAW
Material	AWSD1.1
Electrode	E7018
Position	1.2.3 G F
Pl. / Pipe / dia	OVER 24 "
Thickness	3 :24 MM
Backing	NA
Shielding gas	NA

This card is cleared for the mentioned limits only , and may removed on the job if in the opinion of the inspection engineer , the weld quality is not satisfactory

Employer Approval

QUALITY MASTERS
ENGINEERING COMPANY FOR DISTINCT WORKS
6 EL SHERIF STREET - ASWAN STREET - HELIOPOLIS - CAIRO
TEL. FAX. : 002-02-6345720 MOBILE : 0101676644 / 0101459458
E MAIL : qmasters2004@yahoo.com – qualitymasters@yahoo.com

كواليـــــتى ماســـــترز
الشـــــركه الهندســـــيه للاعمـــــال المتميـــــزه
عمـــــارات الشريـــــف رقـــم 6 - شارع اســـــوان - مصـــــر الجديده - القـــــاهره
تليـــفون / فـــاكس : 002-02-6345720 محمول : 0101676644 / 0101459458
بريـــد اليكترونى :

WELDER QUALIFICATION CERTIFICATE

CLIENT	AL FAIK
Location	SITE WORKSHOP
Project	CAIRO WEST SUPER CRITICAL P.S.

Date	9/1/2020
Certificate No.	126
Expiry	9/1/2021

Name	MOHAMED ABD EL-WAHAB M. S
Stamp	S7
ID No.	
WTR. No.	131
Lab. Test No.	134
Tested By	Q MASTERS
PRORESSION	UPHILL

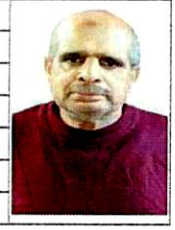

Test Result

Mechanical Guided Bent Test

FACE BEND	PASS 2 SAMPLE
ROOT BEND	PASS 2 SAMPLE
Long R/F	NA

Fillet Weld

Macro	NA
BREAK BEND	NA

Visual

CAP	ACCEPT

NDT

RT	NA
UT	PASS
PT/MT	NA

	Test	Qualification
Process	FCAW	FCAW
Type	SIMI AUO	SIMI AUO
WPS no.	AWS D1.1	AWS D1.1
Joint Design	GROOVE	ALL
Backing	NA	NA
Material	S355	S235-275-355
Thickness	12	OVER 3 MM
Position	3G	1-2-3- G
Dia. Pl.	PLATE	3:24 MM
Electrode	E71T	E71T
Elect. Size	1.2	1.2
SFA Spec	5.18	
Deposited Weld Metal	T+3	ALL
Gas Type	CO2	CO2
GMAW Trans Mode	NA	
GTAW Polarity	NA	
GTAW Type	NA	
Remote Control	NA	
Voltage Control	YES	
Consumable Insert	NO	
Flux	NA	
Flux A/F no.	NA	

We certify that the above records are correct and the test coupons were prepared and tested according to the requirements of AWS D1.1Code.

Approvals

QUALITY MASTERS ENGINEERING CO. 3 QUALITY CONTROL DEPARTMENT

FAIK شركة الفايق للهندسة والتجارة ش.م.م S.A.E 3 Al Faik for Engineering&Trading

Welder Identification Card

Name	MOHAMED ABD EL-WAHAB M. S
Stamp	S7
ID No.	0
WTR No.	131
Lab Test No.	134
Tested By	Q MASTERS
Company	STEEL LINK
Project	STEEL STRUCTURE
Approvals	SITE

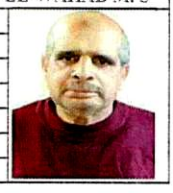

Process	FCAW
Material	AWSD1.1
Electrode	E71T
Position	1.2.3 G F
Pl. / Pipe / dia	OVER 24 "
Thickness	3 MM AND OVER
Backing	NA
Shielding gas	CO2

This card is cleared for the mentioned limits only , and may removed on the job if in the opinion of the inspection engineer , the weld quality is not satisfactory

Employer Approval

QUALITY MASTERS
ENGINEERING COMPANY FOR DISTINCT WORKS
6 EL SHERIF STREET - ASWAN STREET - HELIOPOLIS - CAIRO
TEL. FAX. : 002-02-6345720 MOBILE : 0101676644 / 0101459458
E MAIL : qmasters2004@yahoo.com – qualitymasters@yahoo.com

كواليـــتى ماســـــترز
الشـــركه الهندســـيه للاعمـــــال المتميـــزه
عمـــارات الشريـــف رقـم 6 - شارع اســـوان - مصـــر الجديده - القـــاهره
تليـــفون / فـــاكس : 002-02-6345720 محمول : 0101676644 / 0101459458
بريـــد اليكترونى :

FAIK فايق

Website: www.faik.com.eg

Tack Welder Performance Qualification

Welder Name: SABER ZEDAN	stamp No:2	Date : 22-01-2012

Test Description

WPS followed : 1	Test Coupon : ■ Production weld : □
Specification of Base Metal(s) : ASTM A36	Thickness : 6 mm

Testing Conditions and Qualification Limits

Welding Variable	Record actual values	Qualification Range
Process/Type [Table 4.11,Item 1]	FCAW	FCAW
Electrode (single or multiple) [Table 4.11 Item 8]	single	single
Current / Polarity	DCEP	DCEP
Position [Table 4.11, Item 4]	F	F
Weld Progression [Table 4.11, Item 6]	N A	N A
Baking (Yes or No) [Table 4.11, Item (7)]	with backing	with backing
Material/Spec.	ASTM A 36 to ASTM A 36	All Group No 1
Base Metal		
Thickness: (Plate)		
Groove	--	--
Fillet		3mm - unlimited
Thickness: (Pipe/tube)		
Groove	N A	N A
Fillet	N A	N A
Diameter: (Pipe)		
Groove	N A	N A
Fillet	N A	N A
Filler Metal [Table 4.11, Item (3)]		
Spec. No.	5.20	5.20
Class	E 71T-1	
F-No. [Table 4.11, Item (2)]	6	6
Gas/Flux Type [Table 4.11, Item (3)]	CO2	shielding gas

Test Results

Visual Examination of complete weld (4.8.1) : Accepted

Guided Bend Test Results (4.30.5)

	1	2	3	4
Type				
Result				

Fillet Test Results (4.30.2.3 & 4.30.4.1)

Appearance: accepted

Fracture Test Root Penetration: accepted

Fillet Size: accepted Macroetch:

Radiographic Test Results (4.30.3.1)

Result :		Interpreted by: --
Report No. :		Test No.: Date :

FAIK فايق True Copy

We, the undersigned, certify that the statements in this record are correct and that the test welds, were prepared, welded, and tested in conformance with the requirements of section 4 AWS D1.1/D1.1M, (2010) Structural Welding Code-Steel.

	Manufacturer	AWS QC 1 Authorized
By	Engineer : Walied Faik	Mohammed Assal [CWI number 00010371]
Signature and date		

MOHAMMED G. ASSAL 00010371 CWI

Website: www.faik.com.eg

Welder Performance Qualification (WPQ)

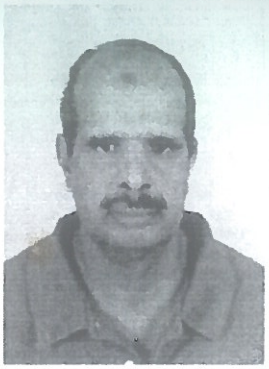

Welder Name: Mohamed Abd-Elwhaab	stamp No:1	Date : 28-12-2011

Test Description

WPS followed : 1	Test Coupon : ■ Production weld : □
Specification of Base Metal(s) : ASTM A36	Thickness : 6 mm

Testing Conditions and Qualification Limits

Welding Variable	Record actual values	Qualification Range
Process/Type [Table 4.11,Item 1]	FCAW	FCAW
Electrode (single or multiple) [Table 4.11 Item 8]	single	single
Current / Polarity	DCEP	DCEP
Position [Table 4.11, Item 4]	F	F for fillet
Weld Progression [Table 4.11, Item 6]	N A	N A
Baking (Yes or No) [Table 4.11, Item (7)]	with backing	with backing
Material/Spec.	ASTM A 36 to ASTM A 36	All Group No 1
Base Metal		
Thickness: (Plate)		
Groove	--	--
Fillet		3mm - unlimited
Thickness: (Pipe/tube)		
Groove	N A	N A
Fillet	N A	N A
Diameter: (Pipe)		
Groove	N A	N A
Fillet	N A	N A
Filler Metal [Table 4.11, Item (3)]		
Spec. No.	5.20	5.20
Class	E 71T-1	E 71T-1
F-No. [Table 4.11, Item (2)]	6	6
Gas/Flux Type [Table 4.11, Item (3)]	CO2	shielding gas

Test Results

Visual Examination of complete weld (4.8.1) : Accepted

Guided Bend Test Results (4.30.5)

	1	2	3	4
Type				
Result				

Fillet Test Results (4.30.2.3 & 4.30.4.1)

Appearance: accepted

Fracture Test Root Penetration: accepted

Fillet Size: accepted Macroetch: accepted

Radiographic Test Results (4.30.3.1)

Result :		Interpreted by: --	
Report No. :		Test No.:	Date :

FAIK True Copy

We, the undersigned, certify that the statements in this record are correct and that the test welds, were prepared, welded, and tested in conformance with the requirements of section 4 AWS D1.1/D1.1M, (2010) Structural Welding Code-Steel.

	Manufacturer	Authorized
By	Engineer : Walled Faik	Mohamed Abd-Elwhaab Assar [CWI number 00010371]
Signature and date		28.12.11

AWS QC 1 MOHAMED ABD-ELWHAAB ASSAR 00010371 CWI

Website: www.faik.com.eg

Welder Performance Qualification (WPQ)

Welder Name: Saied Mustafa Saied	stamp No:3	Date : 28-12-2011

Test Description

WPS followed : 1	Test Coupon : ■ Production weld : □
Specification of Base Metal(s) : ASTM A36	Thickness : 6 mm

Testing Conditions and Qualification Limits

Welding Variable	Record actual values	Qualification Range
Process/Type [Table 4.11,Item 1]	FCAW	FCAW
Electrode (single or multiple) [Table 4.11 Item 8]	single	single
Current / Polarity	DCEP	DCEP
Position [Table 4.11, Item 4]	F	F for groove F,H for fillet
Weld Progression [Table 4.11, Item 6]	N A	N A
Baking (Yes or No) [Table 4.11, Item (7)]	with backing	with backing
Material/Spec.	ASTM A 36 to ASTM A 36	All Group No 1
Base Metal		
Thickness: (Plate)		
Groove	6 mm	3mm- 12mm
Fillet		3mm - unlimited
Thickness: (Pipe/tube)		
Groove	N A	N A
Fillet	N A	N A
Diameter: (Pipe)		
Groove	N A	N A
Fillet	N A	N A
Filler Metal [Table 4.11, Item (3)]		
Spec. No.	5.20	5.20
Class	E 71T-1	
F-No. [Table 4.11, Item (2)]	6	6
Gas/Flux Type [Table 4.11, Item (3)]	CO2	shielding gas

Test Results

Visual Examination of complete weld (4.8.1) : Accepted

Guided Bend Test Results (4.30.5)

	1	2	3	4
Type				
Result				

Fillet Test Results (4.30.2.3 & 4.30.4.1)

Appearance:

Fracture Test Root Penetration:

Fillet Size: Macroetch:

Radiographic Test Results (4.30.3.1)

Result :		Interpreted by:	
Report No. :		Test No.:	Date : 28-12-2011

This welder was qualified by PQR 1

We, the undersigned, certify that the statements in this record are correct and that the test welds, were prepared, welded, and tested in conformance with the requirements of section 4 AWS D1.1/D1.1M, (2010) Structural Welding Code-Steel.

	Manufacturer	AWS QC 1 Authorized
By	Engineer : Walied Faik	Mohammed A.G. Assal [CWI number 00010371]
Signature and date		

FAIK True Copy

MOHAMMED A.G. ASSAL 00010371 CWI

28.12.11

Website: www.faik.com.eg

Welder Performance Qualification (WPQ)

Welder Name: Ibrahim Ahmed Mohamed	stamp No:4	Date : 22-01-2012

Test Description

WPS followed : 1	Test Coupon : ■ Production weld : □
Specification of Base Metal(s) : ASTM A36	Thickness : 6 mm

Testing Conditions and Qualification Limits

Welding Variable	Record actual values	Qualification Range
Process/Type [Table 4.11,Item 1]	FCAW	FCAW
Electrode (single or multiple) [Table 4.11 Item 8]	single	single
Current / Polarity	DCEP	DCEP
Position [Table 4.11, Item 4]	F	F for fillet
Weld Progression [Table 4.11, Item 6]	N A	N A
Baking (Yes or No) [Table 4.11, Item (7)]	with backing	with backing
Material/Spec.	ASTM A 36 to ASTM A 36	All Group No 1
Base Metal		
Thickness: (Plate)		
Groove	--	--
Fillet		3mm - unlimited
Thickness: (Pipe/tube)		
Groove	N A	N A
Fillet	N A	N A
Diameter: (Pipe)		
Groove	N A	N A
Fillet	N A	N A
Filler Metal [Table 4.11, Item (3)]		
Spec. No.	5.20	5.20
Class	E 71T-1	E 71T-1
F-No. [Table 4.11, Item (2)]	6	6
Gas/Flux Type [Table 4.11, Item (3)]	CO2	shielding gas

Test Results

Visual Examination of complete weld (4.8.1) : Accepted

Guided Bend Test Results (4.30.5)

	1	2	3	4
Type				
Result				

Fillet Test Results (4.30.2.3 & 4.30.4.1)

Appearance: accepted

Fracture Test Root Penetration: accepted

Fillet Size: accepted Macroetch: accepted

Radiographic Test Results (4.30.3.1)

Result :		Interpreted by: --	
Report No. :		Test No.:	Date:

FAIK True Copy

We, the undersigned, certify that the statements in this record are correct and that the test welds were prepared, welded, and tested in conformance with the requirements of section 4 AWS D1.1/D1.1M, (2010) Structural Welding Code-Steel.

	Manufacturer	Authorized
By	Engineer : Walied Faik	Mohammed G Assal [CWI number 00010371]
Signature and date		22.01.12

AWS QC 1 MOHAMMED G. ASSAL 00010371 CWI

Website: www.faik.com.eg

Welder Perform n Qualification (WPQ)

Welder Name: Fahd Samier	stamp No:5	Date : 22-01-2012

Test Description

WPS followed : 3	Test Coupon : ■ Production weld : □
Specification of Base Metal: SB 625 UNS N08904	Thickness : 1.2 mm

Testing Conditions and Qualification Limits

Welding Variable	Record actual values	Qualification Range
Process/Type	GTAW	GTAW
Electrode (single or multiple)	single	single
Current / Polarity	DCEN	DCEN
Position	F	F for groove F,H for fillet
Weld Progression	N A	N A
Baking (Yes or No)	with backing	with backing
Material/Spec.	SB 625 UNS N08904	SB 625 UNS N08904
Base Metal		
Thickness: (Plate)		
Groove	1.2 mm	1.2mm- 2.4mm
Fillet		Up to 2.4mm
Thickness: (Pipe/tube)		
Groove	N A	N A
Fillet	N A	N A
Diameter: (Pipe)		
Groove	N A	N A
Fillet	N A	N A
Filler Metal [Table 4.11, Item (3)]		
Spec. No.	-	-
Class	SB 625 UNS N08904	SB 625 UNS N08904
F-No.	-	-
Gas/Flux Type	Argon	Argon

Test Results

Visual Examination of complete weld (4.8.1) : Accepted

Guided Bend Test Results (4.30.5)

	1	2	3	4
Type				
Result				

Fillet Test Results (4.30.2.3 & 4.30.4.1)

Appearance:

Fracture Test Root Penetration:

Fillet Size: Macroetch:

Radiographic Test Results (4.30.3.1)

Result :		Interpreted by:	
Report No. :		Test No.:	Date :

This welder was qualified by PQR 2

FAIK True Copy

We certify that the statements in this record are correct and that test coupons were prepared welded and tested in accordance with the requirements of Sect. IX of the ASME Code.

	Manufacturer	Authorized
By	Engineer : Walied Faik	Mohammed G Assal [CWI number 00010371]
Signature and date		22-01-12

FAIK

AWS QC-1 MOHAMMED G. ASSAL 00010371 CWI

Website: www.faik.com.eg

Welder Performance Qualification (WPQ)

Welder Name: Ahmed Hassan Ahmed	stamp No:6	Date : 30-12-2011

Test Description

WPS followed : 4	Test Coupon : ■ Production weld : □
Specification of Base Metal(s) : 904L /1.4539	Thickness : 10 mm

Testing Conditions and Qualification Limits

Welding Variable	Record actual values	Qualification Range
Process/Type [4.8.1]	GMAW	GMAW
Electrode (single or multiple)	single	single
Current / Polarity	DCEP	DCEP
Position 4.8.4 or 4.9.4]	F	F
Weld Progression [4.8.6]	N A	N A
Baking (Yes or No) [4.8.7]	with backing	with backing
Material/Spec.	904L /1.4539	904L /1.4539
Base Metal		
Thickness: (Plate)		
Groove	10 mm	2 mm- 20 mm
Fillet		2 mm - unlimited
Thickness: (Pipe/tube)		
Groove	N A	N A
Fillet	N A	N A
Diameter: (Pipe)		
Groove	N A	N A
Fillet	N A	N A
Filler Metal [4.8.2]		
Spec. No.	5.9	5.9
Class	ER 385	
F-No.	6	6
Gas/Flux Type [4.8.3]	Argon	shielding gas

Test Results

Visual Examination of complete weld (4.10.1.1) : Accepted

Guided Bend Test Results (4.10.2.3.5)

	1	2	3	4
Type				
Result				

Fillet Test Results (4.10.5)

Appearance:

Fracture Test Root Penetration:

Fillet Size: Macroetch:

Radiographic Test Results (4.10.3)

Result :		Interpreted by:	
Report No. :		Test No.:	Date : 30-12-2011

This welder was qualified by PQR 3

We, the undersigned, certify that the statements in this record are correct and that the test welds were prepared, welded, and tested in conformance with the requirements of section 4 AWS D1.6 Structural Welding Code-Stainless Steel.

	Manufacturer	Authorized
By	Engineer : Waled Faik	Mohammed G Assal [CWI number 00010371]
Signature and date		

Website: www.faik.com.eg

Welder Performance Qualification (WPQ)

Welder Name: Fahd Samier	stamp No:5-2	Date : 30-12-2011

Test Description

WPS followed : 3	Test Coupon : ■ Production weld : □
Specification of Base Metal: SA 240 Type 316 L	Thickness : 1.2 mm

Testing Conditions and Qualification Limits

Welding Variable	Record actual values	Qualification Range
Process/Type	GTAW	GTAW
Electrode (single or multiple)	single	single
Current / Polarity	DCEN	DCEN
Position	F	F for groove F,H for fillet
Weld Progression	N A	N A
Baking (Yes or No)	with backing	with backing
Material/Spec.	SA 240 Type 316 L	SA 240 Type 316 L
Base Metal		
Thickness: (Plate)		
Groove	1.2 mm	1.2mm- 2.4mm
Fillet		Up to 2.4mm
Thickness: (Pipe/tube)		
Groove	N A	N A
Fillet	N A	N A
Diameter: (Pipe)		
Groove	N A	N A
Fillet	N A	N A
Filler Metal [Table 4.11, Item (3)]		
Spec. No.	-	-
Class	SA 240 Type 316 L	SA 240 Type 316 L
F-No.	-	-
Gas/Flux Type	Argon	Argon

Test Results

Visual Examination of complete weld (4.8.1) : Accepted

Guided Bend Test Results (4.30.5)

	1	2	3	4
Type				
Result				

Fillet Test Results (4.30.2.3 & 4.30.4.1)

Appearance:	
Fracture Test Root Penetration:	
Fillet Size:	Macroetch:

Radiographic Test Results (4.30.3.1)

Result :		Interpreted by:	
Report No. :		Test No.:	Date :
This welder was qualified by PQR 4			

We certify that the statements in this record are correct and that test coupons were prepared welded and tested in accordance with the requirements of Sec. IX of the ASME Code.

	Manufacturer	Authorized
By	Engineer : Walied Faik	Mohammed G. Assal [CWI number 00010371]
Signature and date		30.12.11

COMPAÑIA ESPAÑOLA DE LAMINACION, S.L.
OFICINAS: c/Ferralla,12 Pol.Ind. "SAN VICENTE"
08755 Castellbisbal (BARCELONA)
NIF: B-59/559351 Sociedad Unipersonal
Teléfono: +34 93 773 04 00 - Fax: +34 93 772 02 76
Calidad: +34 93 817 66 84 - Fax: +34 93 773 05 52

CELSA GROUP

CELSA BARCELONA

Certified True Copy
Faik Company
Invoice: ----
Client: Bierrum Company
Client No. CS-6840
Date: 29.1.2012

CERTIFICATE - RESULTS OF ASSAYS
UNE EN 10.204:2006, Type 3.1

Standard: ASTM
Type: A36
St. Mes.: A6/A6M
St. Tol.: A6/A6M
Our Ref: 01614490
(B08-31BEMB)

Customer: DBMSC-STEEL FZCO
P.O.BOX 2629
JEBEL ALI - DUBAI
Utd.Arab.Emir.

Destination: DBMSC-STEEL FZCO
CFR LO JEBEL ALI/ SHARJAH , UAE
Utd.Arab.Emir.

Delivery order : 20[illegible]232
Order number : 12[illegible]1224
Your order : 0003169AE

Material			Heat Number	Quantity	CHEMICAL ANALYSIS															MECHANICAL PROP		
					C	Mn	Si	S	P	Cr	Ni	Cu	Mo	V	Nb	AL	N	Ti	CE	Yield Str.	Tensile Str.	A5
				MT	%	%	%	%	%	%	%	%	%	%	%	%	%	%	%	MPA	MPA	%
A36	100X8	L. 6.00m	CE542774	2.035	0.090	0.530	0.150	0.012	0.020	0.100	0.120	0.440	0.018	0.002	0.002	0.004	0.0101	0.001	0.265	320	450	38.0
A36	100X8	L. 6.00m	CE542775	8.140	0.080	0.550	0.140	0.019	0.021	0.100	0.100	0.420	0.015	0.002	0.002	0.004	0.0098	0.001	0.230	312	442	39.0
A36	70X10	L. 6.00m	CE543053	1.846	0.080	0.550	0.160	0.037	0.012	0.080	0.130	0.490	0.016	0.002	0.003	0.004	0.0104	0.001	0.233	312	442	37.0
A36	60X6	L. 6.00m	CE543111	2.035	0.090	0.550	0.170	0.039	0.016	0.090	0.110	0.520	0.021	0.002	0.002	0.004	0.0104	0.001	0.246	305	435	39.0
A36	60X6	L. 6.00m	CE543112	8.140	0.090	0.480	0.160	0.034	0.013	0.070	0.110	0.460	0.020	0.002	0.002	0.003	0.0099	0.001	0.226	310	440	39.0
A36	75X6	L. 6.00m	CE543121	11.448	0.090	0.550	0.150	0.036	0.016	0.100	0.190	0.480	0.022	0.002	0.002	0.003	0.0103	0.001	0.251	310	440	38.0
A36	50X10	L. 6.00m	CE543291	9.897	0.090	0.520	0.140	0.024	0.017	0.090	0.100	0.420	0.019	0.001	0.002	0.003	0.0104	0.001	0.233	307	448	38.0
A36	40X5	L. 6.00 m	CE543327	13.208	0.060	0.410	0.100	0.040	0.018	0.140	0.110	0.440	0.018	0.002	0.003	0.003	0.0108	0.001	0.197	335	443	39.3
A36	50X6	L. 6.00m	CE543388	18.400	0.080	0.550	0.150	0.027	0.019	0.100	0.120	0.460	0.018	0.001	0.000	0.003	0.0095	0.001	0.244	325	435	39.0

-Product suitable for galvanizing: 0.14<=Si<=0.25 & P<=0.035.
-Intended use: construction and civil engineering.
-Durability: not determined.
-Regulated substances: not determined

Castellbisbal,29.07.2010
Sergi Cabrerizo Sanjuan
Quality Control Manager

CERTIFIED TRUE COPY
DBMSC STEEL TRADING FZC
HAMRIYA FREEZONE SHARJAH - U.A.E.

DBMSC STEEL FZCO
QA / QC REVIEWED

COMPAÑIA ESPAÑOLA DE LAMINACION, S.L.
CELSA
CASTELLBISBAL

Website: www.faik.com.eg

Welding Procedure Specification (WPS) According to AWS Code D1.6

WPS No :4

Date : 30-12-2011

WELDING PROCEDURE SPECIFICATION (WPS) Yes ■
PREQUALIFIED_____ QUALIFIED BY TESTING__ ■
or PROCEDURE QUALIFICATION RECORDS (PQR) Yes ☐

Company Name: **Bierrum Company**
Welding Process (es) : **GMAW**
Supporting PQR No.(s) : **4**

Identification:
Revision: **0** Date:
Type-Manual ☐ Semi-Automatic ■
Machine ☐ Automatic ☐

JOINT DESIGN USED
Type: **FILLET**
Single ☐ Double Weld ☐
Backing: Yes ■ No ☐
Backing Material: **904L /1.4539**
Root Opening -- Root Face Dimension --
Groove Angle: -- Radius (J-U) --
Backing Gouging: Yes☐ No ■ Method____

BASE METALS
Material Spec.: 904L /1.4539
Type or Grade : UNS No N 08904
Thickness: Groove_____Fillet: **10 mm**

FILLER METALS
AWS Specification: **SFA 5.9**
AWS Classification: **ER 385**

SHILDING
Flux_____ Gas: **Argon**
Composition: **100% Argon**
Electrode-Flux (class) __Flow Rate: **13-15 L/min**
_____Gas Cup Size: **#4**

PREHEAT
Preheat Temp. Min.: **ambient temp.**
Interpass Temp. Min.: **ambient temp.** Max: **100 C**

POSITION
Position of Groove:_____Fillet: **F,H**
Vertical Progression: Up ☐ Down ☐

ELECTRICAL CHARACATERISTICS
Transfer Mode (GMAW) Short-Circuiting ☐
Globular ■ Spray☐
Current AC☐ DCEP ■ DCEN☐ Pulsed☐
Tungsten Electrode (GTAW)
Size:_____ Type:_____

TECHNIQUE
Stringer or Weave Bead: **Stringer**
Multi-pass or Single-pass (per side): **Multi**
Number of Electrodes: 1
Electrode Spacing Longitudinal: N A
Lateral: N A
Angle : N A
Contact Tube to work distance: **20-40 mm**
Peening: **None**
Interpass cleaning: **Brushing** (stainless steel)

POST WELD HEAT TREATMENT
Temp.: **N A** Time: **N A**

Welding Procedure

Pass or weld layer	Process	Filler Metals		Current		Volts	Travel speed	Joint Details
		Class	Diam.	Type& polarity	Amps or wire feed speed			
1-n	GMAW	ER 385	1.2 mm	DCEP	170-230 A	22-24	--	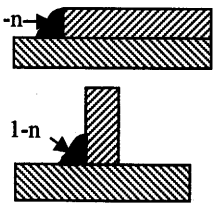

	Manufacturer	Authorized
By	**Engineer: Faik Faik**	**Mohammed G. Assal [CWI number 00010371]**
Signature and date		30-12-11

AWS QC I MOHAMMED G. ASSAL 00010371 CWI